STEERING

PRECAUTION

Care must be taken to replace parts properly because they may affect the performance of the steering system and result in a driving hazard.

TROUBLESHOOTING

Problem	Possible cause	Remedy	Page
Hard steering	Tires improperly inflated Insufficient lubricant Excessive caster Steering system joints worn Lower arm ball joints worn Steering column binding Steering gear out of adjustment or broken Power steering belt loose Fluid level in reservoir low Power steering unit faulty Solenoid valve faulty Electronic control faulty	Inflate tires to proper pressure Lubricate suspension Check front wheel alignment Replace steering system joints Replace lower arm ball joints Inspect steering column Adjust or repair steering gear Adjust belt Check reservoir Check power steering unit Inspect solenoid valve Inspect electronic control	SA–3, 6 SA–3, 6 SR–93, 97 SA–17, 112 SR–4 SR–19, 26 65,75 SR–40 SR–40 SR–45, 65 75 SR–91 SR–87
Poor return	Tires improperly inflated Insufficient lubricant Wheel alignment incorrect Steering column binding Steering gear out of adjustment or broken	Inflate tires to proper pressure Lubricate suspension Check front wheel alignment Inspect steering column Adjust or repair steering gear	SA–3, 6 SA–3, 6 SR–4 SR–19, 26 65, 75
Excessive play	Front wheel bearing worn Main shaft yoke or intermediate shaft yoke worn Lower arm ball joints worn Steering system joints worn Steering gear out of adjustment or broken	Replace front wheel bearing Replace main shaft or interme–diate shaft Replace lower arm ball joints Replace steering system joints Adjust or repair steering gear	SA–11, 36 SR–4 SA–17, 112 SR–93, 97 SR–19, 26 65, 75
Abnormal noise	Steering linkage loose Steering system joints worn Steering gear out of adjustment or broken	Tighten steering linkage Replace steering system joints Adjust or repair steering gear	SR–93, 97 SR–93, 97 SR–19, 26 65, 75

PRECAUTION

Care must be taken to replace parts properly because they may affect the performance of the steering system and result in a driving hazard.

TROUBLESHOOTING

Problem	Possible cause	Remedy	Page
Hard steering	Tires improperly inflated Insufficient lubricant Excessive caster Steering system joints worn Lower arm ball joints worn Steering column binding Steering gear out of adjustment or broken Power steering belt loose Fluid level in reservoir low Power steering unit faulty Solenoid valve faulty Electronic control faulty	Inflate tires to proper pressure Lubricate suspension Check front wheel alignment Replace steering system joints Replace lower arm ball joints Inspect steering column Adjust or repair steering gear Adjust belt Check reservoir Check power steering unit Inspect solenoid valve Inspect electronic control	SA–3, 6 SA–3, 6 SR–93, 97 SA–17, 112 SR–4 SR–19, 26 65,75 SR–40 SR–40 SR–45, 65 75 SR–91 SR–87
Poor return	Tires improperly inflated Insufficient lubricant Wheel alignment incorrect Steering column binding Steering gear out of adjustment or broken	Inflate tires to proper pressure Lubricate suspension Check front wheel alignment Inspect steering column Adjust or repair steering gear	SA–3, 6 SA–3, 6 SR–4 SR–19, 26 65, 75
Excessive play	Front wheel bearing worn Main shaft yoke or intermediate shaft yoke worn Lower arm ball joints worn Steering system joints worn Steering gear out of adjustment or broken	Replace front wheel bearing Replace main shaft or interme–diate shaft Replace lower arm ball joints Replace steering system joints Adjust or repair steering gear	SA–11, 36 SR–4 SA–17, 112 SR–93, 97 SR–19, 26 65, 75
Abnormal noise	Steering linkage loose Steering system joints worn Steering gear out of adjustment or broken	Tighten steering linkage Replace steering system joints Adjust or repair steering gear	SR–93, 97 SR–93, 97 SR–19, 26 65, 75

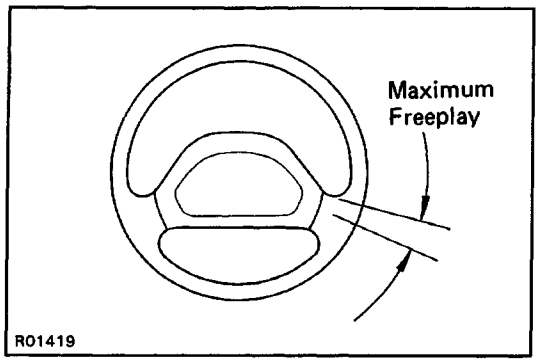

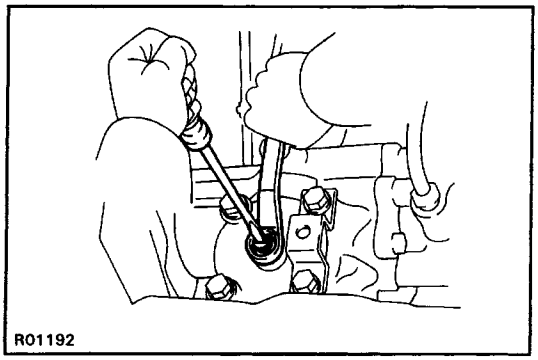

ON–VEHICLE INSPECTION

STEERING WHEEL FREEPLAY

1. CHECK THAT STEERING WHEEL FREEPLAY IS CORRECT

With the vehicle stopped and pointed straight ahead, rock the steering wheel gently back and forth with light finger pressure. Freeplay should not exceed the maximum limit.

Maximum play: 30 mm (1.18 in.)

If incorrect, adjust or repair as required.

2. POINT WHEELS STRAIGHT AHEAD

3. ADJUST STEERING GEAR HOUSING

(a) Loosen the lock nut.

(b) Turn the adjusting screw clockwise to decrease wheel freeplay and counterclockwise to increase it.

HINT: Turn the adjusting screw in small increments and check the wheel freeplay between each adjustment.

4. CHECK THAT STEERING DOES NOT BIND

Turn the steering wheel half way around in both directions.

Check that the freeplay is correct and steering is smooth and without rough spots.

5. HOLD ADJUSTING SCREW AND TIGHTEN LOCK NUT

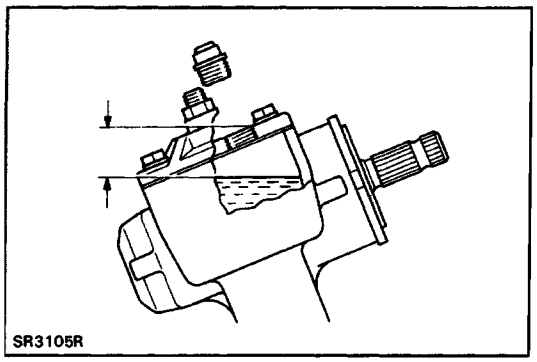

OIL LEVEL

CHECK STEERING GEAR HOUSING OIL LEVEL

Oil level:

2WD 18 – 28 mm (0.71 – 1.10 in.)

4WD 14 – 17 mm (0.55 – 0.67 in.)

If low, fill with gear oil and check for leaks.

STEERING COLUMN

REMOVAL AND INSTALLATION OF STEERING COLUMN

Remove and install the parts as shown.

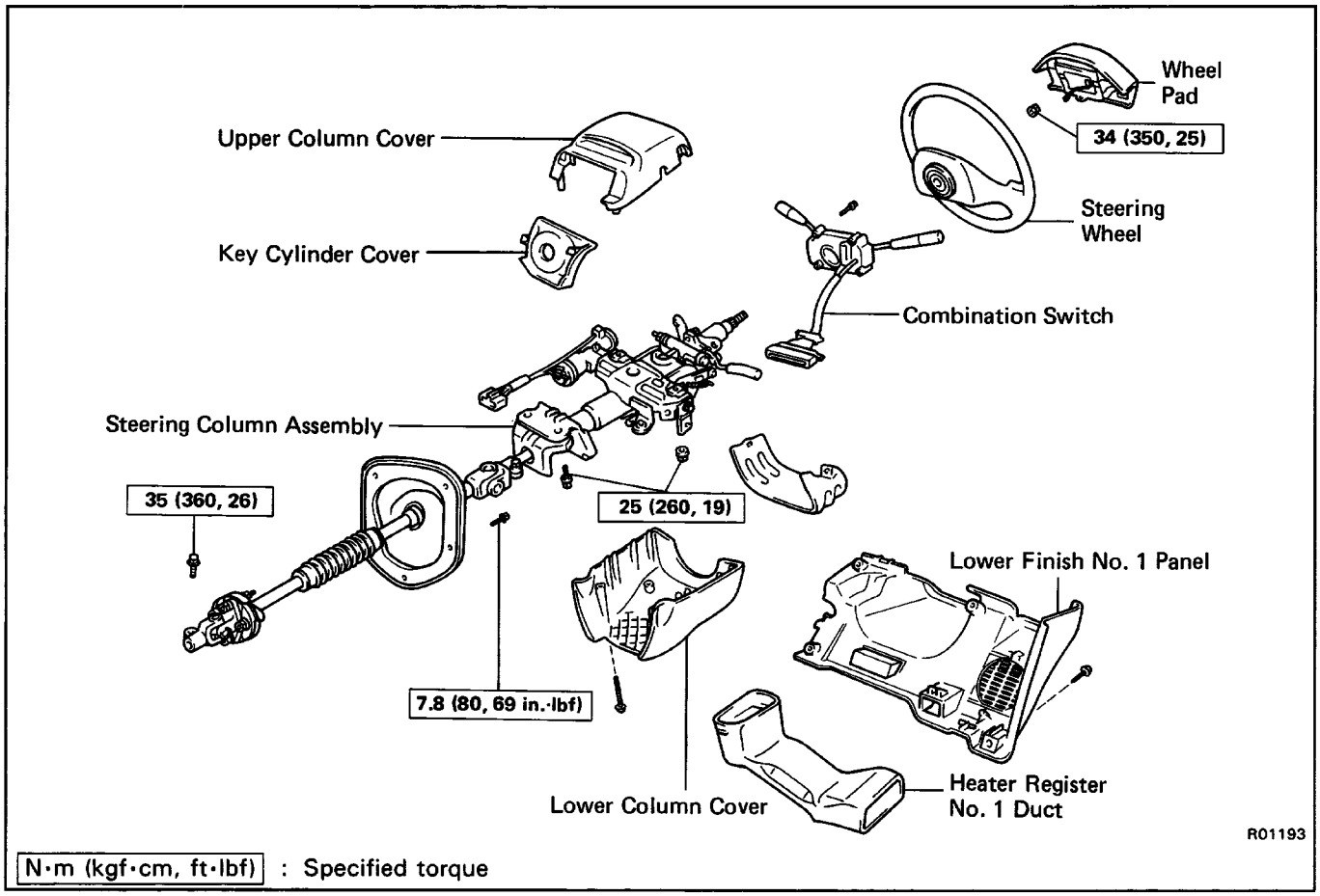

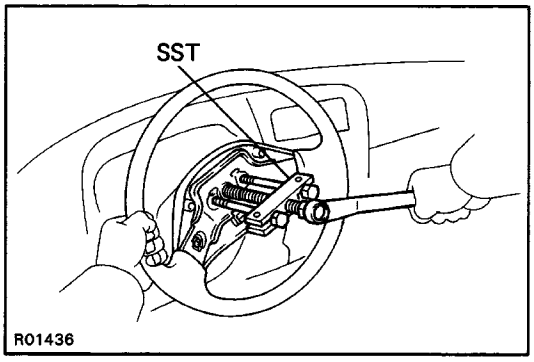

(MAIN POINTS OF REMOVAL)

1. REMOVE STEERING WHEEL

Using SST, remove the steering wheel.
SST 09609–20011

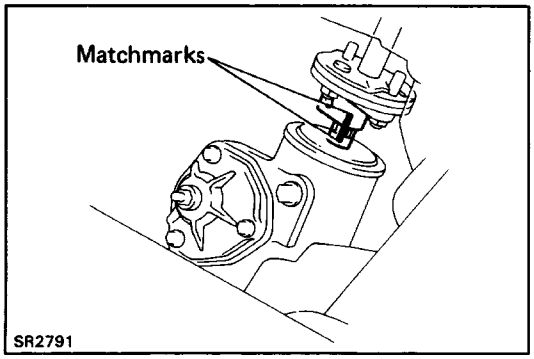

2. DISCONNECT MAIN SHAFT

(a) Place matchmarks on the worm shaft and main shaft.

(b) Disconnect the main shaft from the worm shaft.

Non–Tilt Steering Column
COMPONENTS

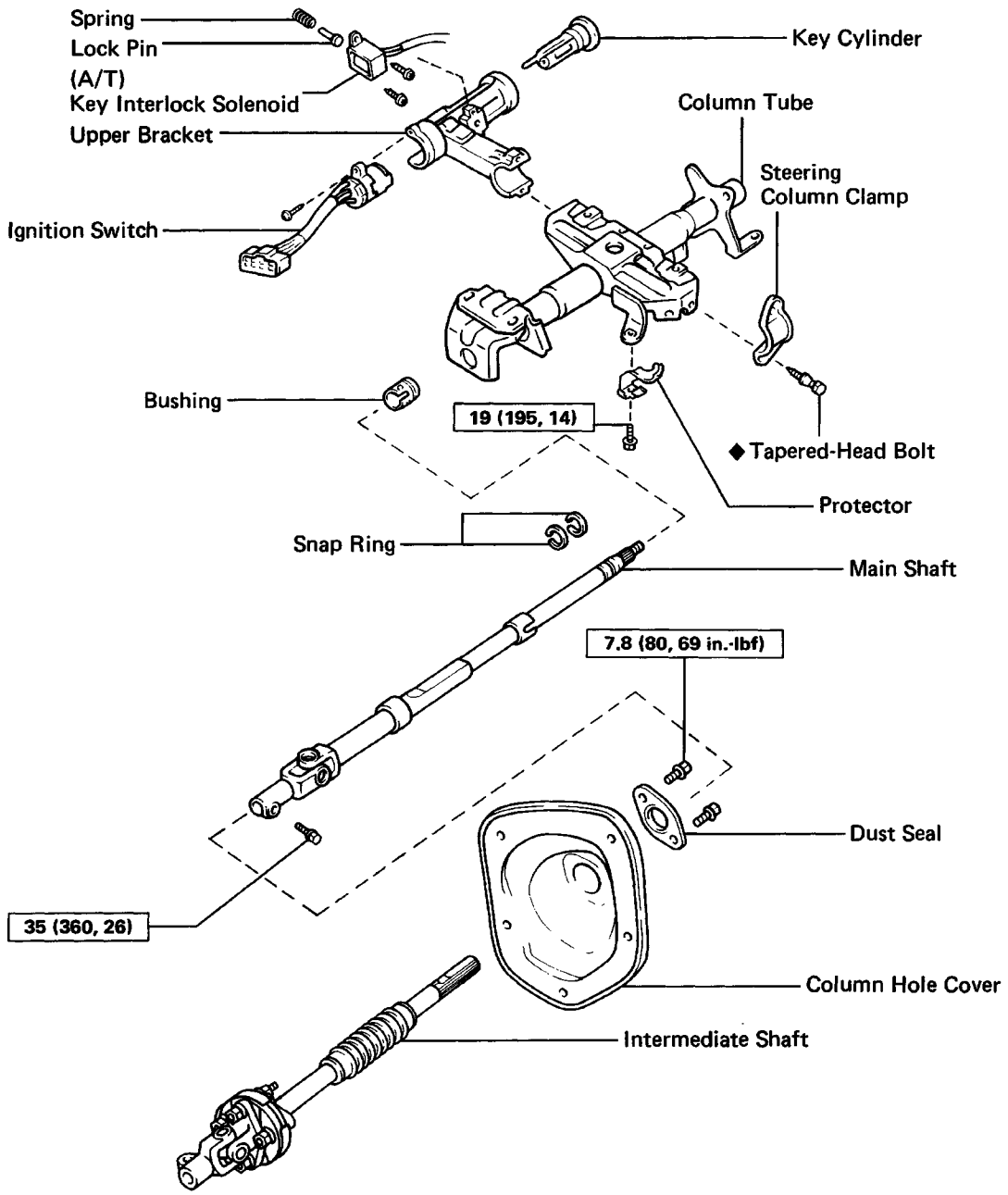

N·m (kgf·cm, ft·lbf) : Specified torque

◆ Non-reusable part

R01437

DISASSEMBLY OF STEERING COLUMN

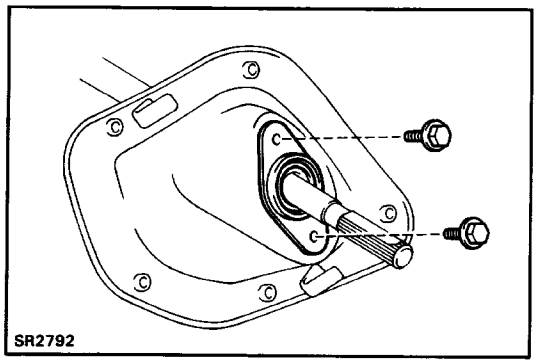

1. REMOVE COLUMN HOLE COVER

(a) Disconnect the intermediate shaft from the main shaft.

(b) Remove two bolts and the dust seal.

(c) Remove the column hole cover.

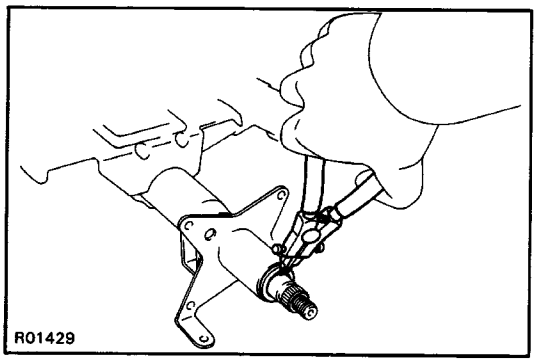

2. PULL OUT MAIN SHAFT

(a) Using snap ring pliers, remove the snap ring.

(b) Pull out the main shaft from the upper tube.

HINT: Do not place the ignition key at the LOCK position.

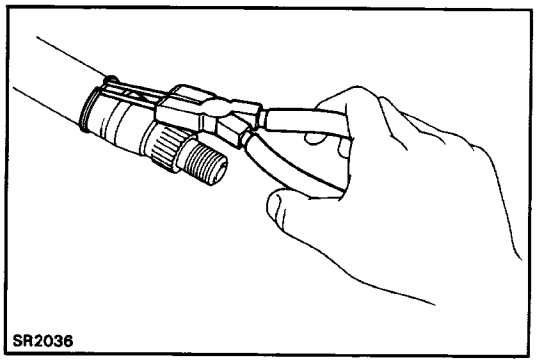

(c) Using snap ring pliers, remove the snap ring.

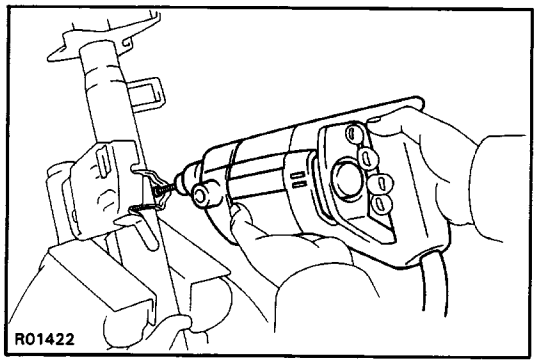

3. REMOVE UPPER BRACKET

(a) Using a centering punch, mark the center of the tapered–head bolts.

(b) Using a 3 – 4 mm (0.12 – 0.16 in.) drill, drill into the tapered–head bolts.

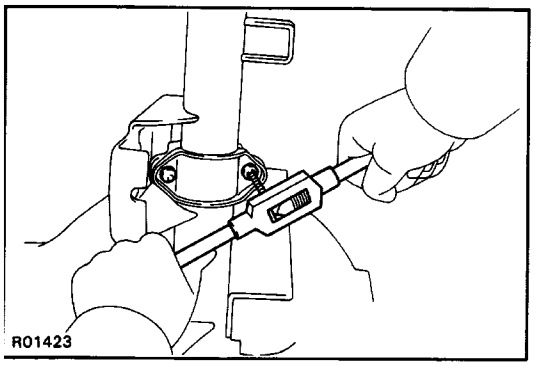

(c) Using a screw extractor, remove the tapered–head bolts.

(d) Remove the two bolts and separate the upper bracket and column tube.

INSPECTION AND REPLACEMENT OF NON–TILT STEERING COLUMN

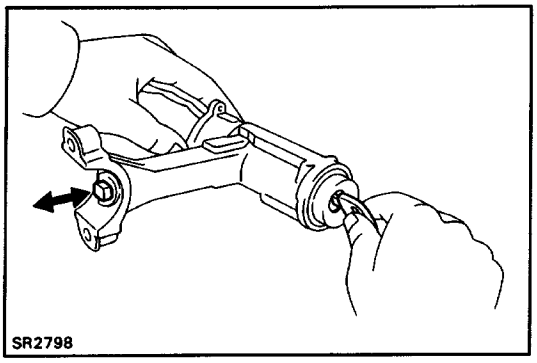

1. INSPECT UPPER BRACKET

Check that the steering lock mechanism operates properly.

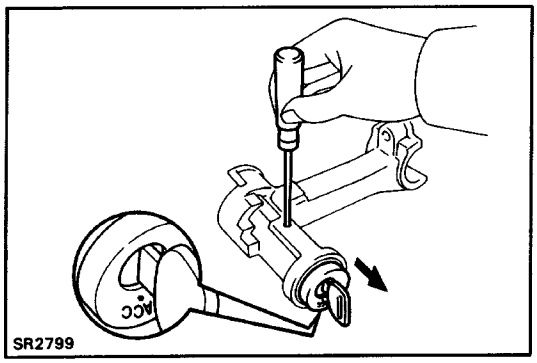

2. IF NECESSARY, REPLACE IGNITION KEY CYLINDER

(a) Place the ignition key at the ACC position.

(b) Push down the stop key with a thin rod, and pull out the key cylinder.

(c) Turn the ignition key plate to the ACC position, and install a new key cylinder into the upper bracket.

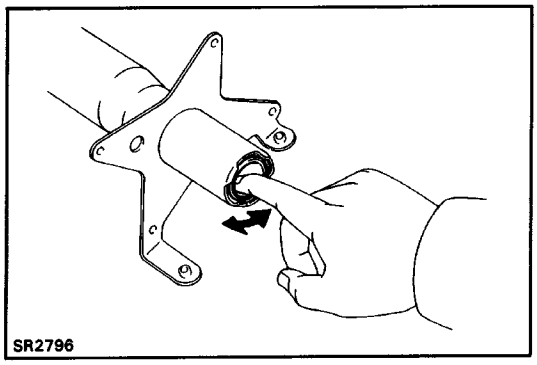

3. INSPECT UPPER BEARING

Check the upper bearing rotation condition and check for abnormal noise.

If the bearing is worn or damaged, replace the column tube assembly.

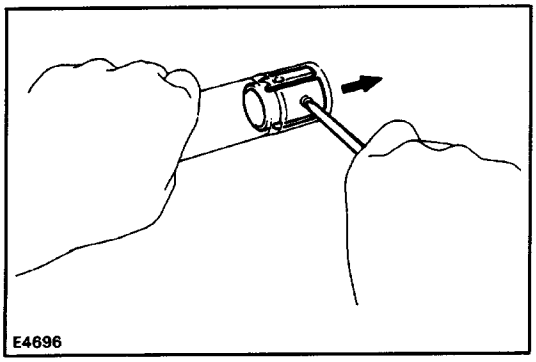

4. IF NECESSARY, REPLACE BUSHING

(a) Using a screwdriver, remove the bushing.

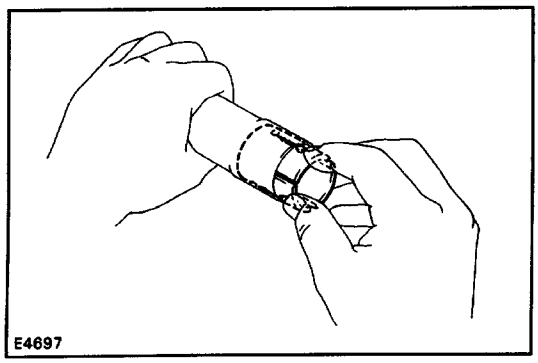

(b) Align the holes of the tube and the projections of a new bushing, and insert the bushing to the column tube.

5. INSPECT KEY INTERLOCK SOLENOID

(See page AT–213)

6. IF NECESSARY, REPLACE KEY INTERLOCK SOLENOID

(See page SR–13)

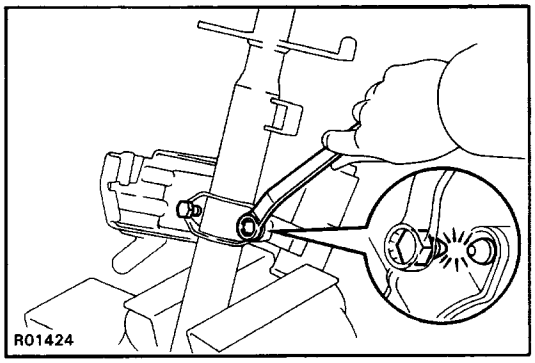

ASSEMBLY OF NON–TILT STEERING COLUMN

(See page SR–5)

1. INSTALL UPPER BRACKET TO COLUMN TUBE

(a) Install the upper bracket with two new tapered–head bolts.

(b) Tighten the tapered–head bolts until the bolt heads break off.

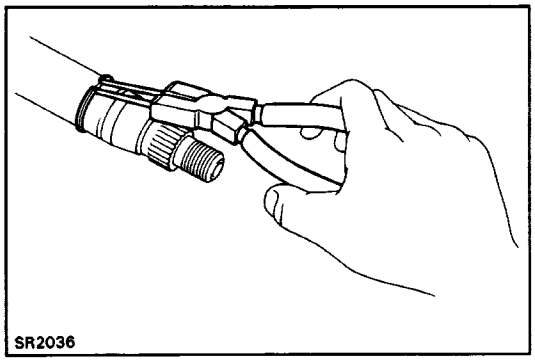

2. INSTALL MAIN SHAFT TO COLUMN TUBE

(a) Using snap ring pliers, install the snap ring in the lower groove of the main shaft.

(b) Install the main shaft in the column tube.

HINT: Do not place the ignition key at LOCK position.

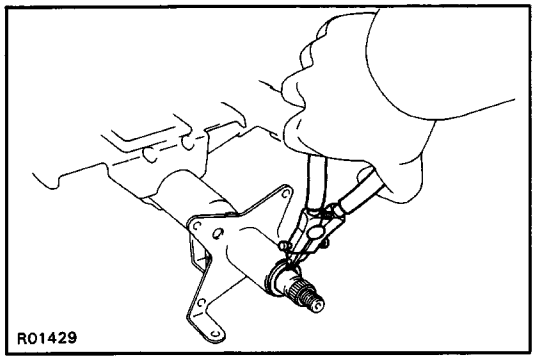

(c) Using snap ring pliers, install the upper snap ring.

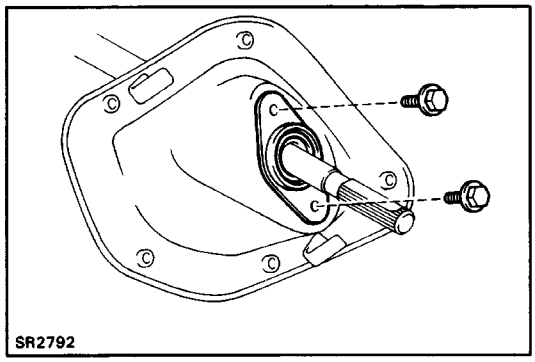

3. INSTALL COLUMN HOLE COVER

(a) Install the intermediate shaft to the column hole cover.

(b) Temporarily install the two bolts and dust seal.

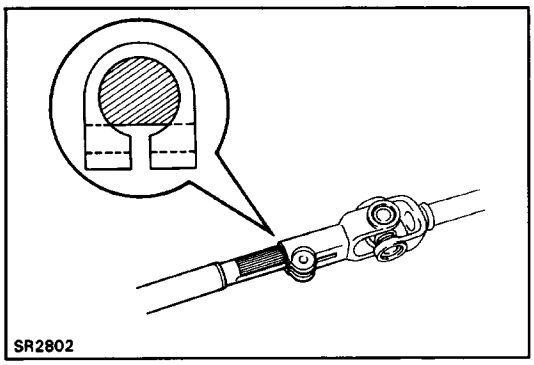

4. CONNECT INTERMEDIATE SHAFT WITH MAIN SHAFT

(a) Place the intermediate shaft in the universal joint as shown.

(b) Temporarily install the bolt.

HINT: After install the column to the body, tighten the universal joint set bolt and dust seal bolts.

Tilt Steering Column
COMPONENTS

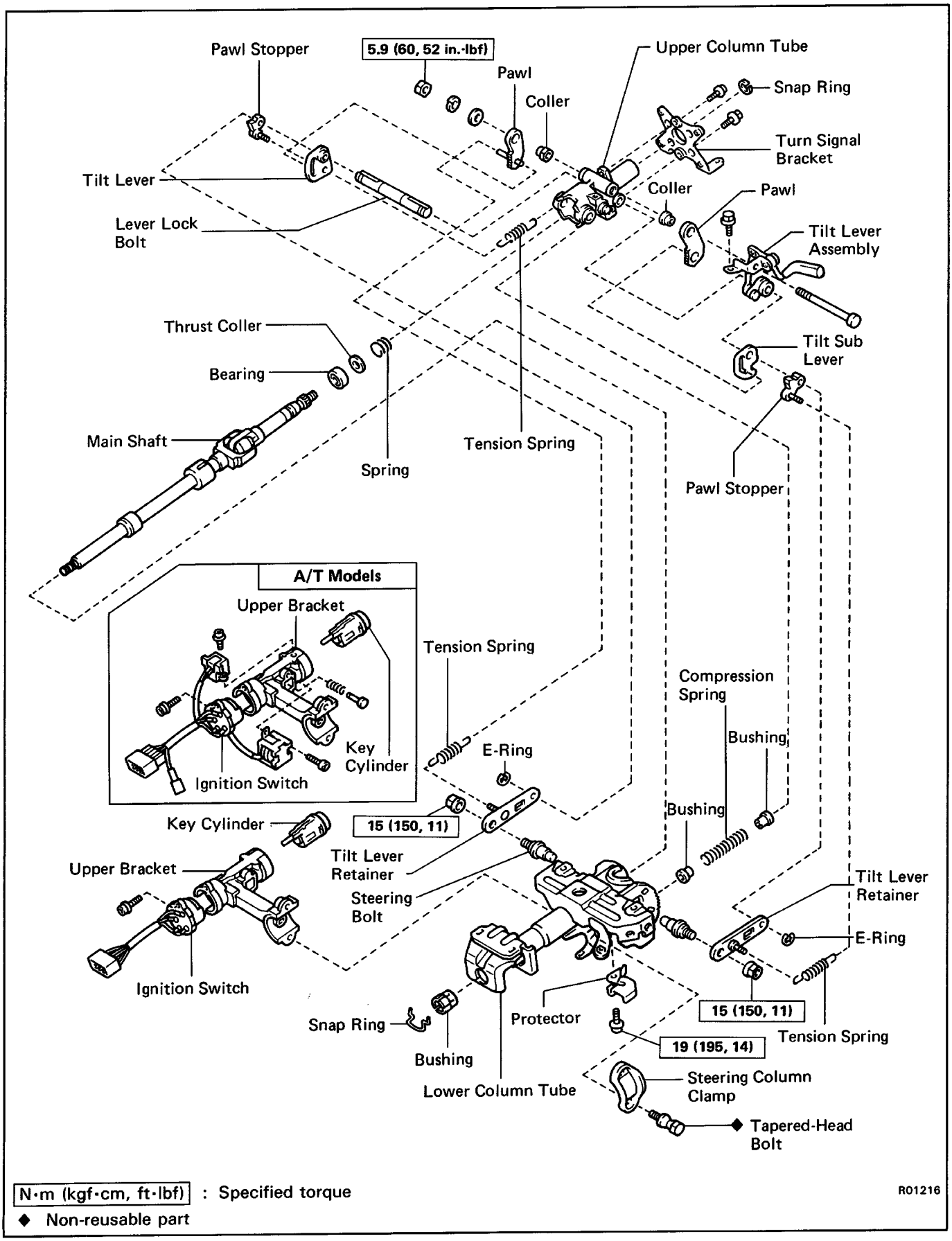

DISASSEMBLY OF STEERING COLUMN

(See page SR–9)

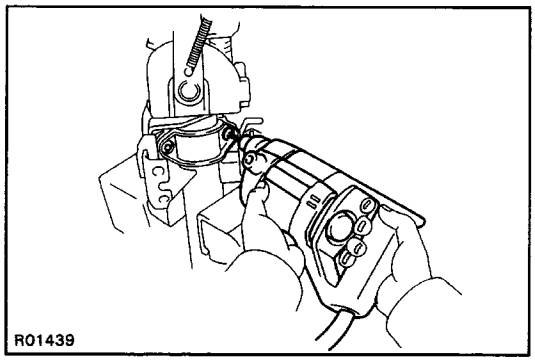

1. REMOVE UPPER BRACKET

(a) Using a centering punch, mark the center of the tapered–head bolt.

(b) Using a 3 – 4 mm (0. 12 – 0.16 in.) drill, drill into the tapered–head bolt.

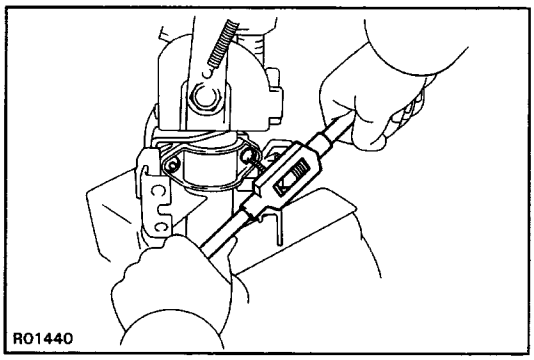

(c) Using a screw extractor, remove the tapered–head bolt.

(d) Remove the two bolts, and separate the upper bracket and the column tube.

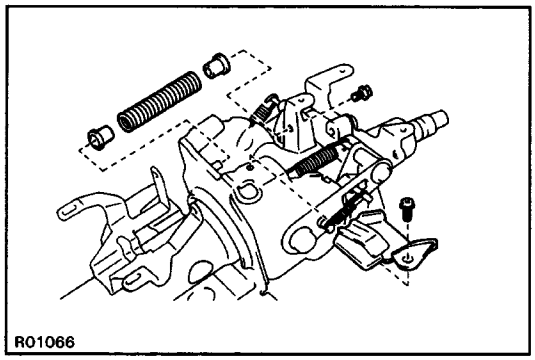

2. REMOVE COMPRESSION SPRING AND TENSION SPRING

(a) Remove the bolt with the compression spring.

(b) Remove the bushings from the spring.

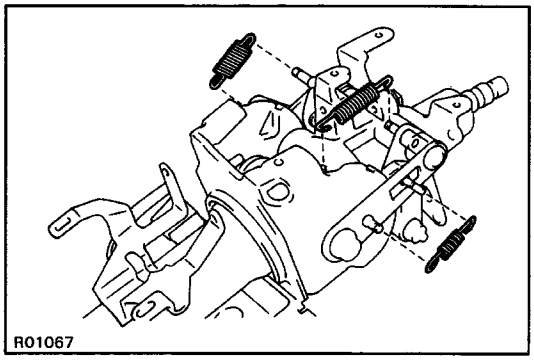

3. REMOVE THREE TENSION SPRINGS

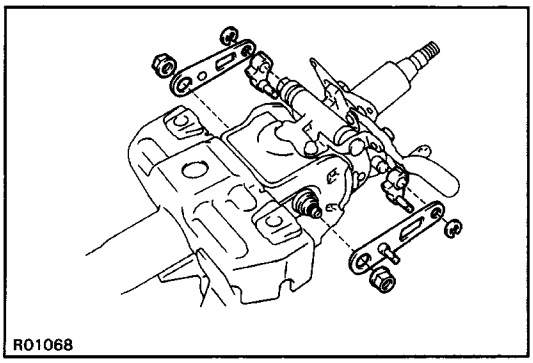

4. REMOVE TWO TILT LEVER RETAINERS

(a) Remove the E–rings from the retainers.

(b) Remove the retainers with the nuts.

5. REMOVE TWO PAWL STOPPERS

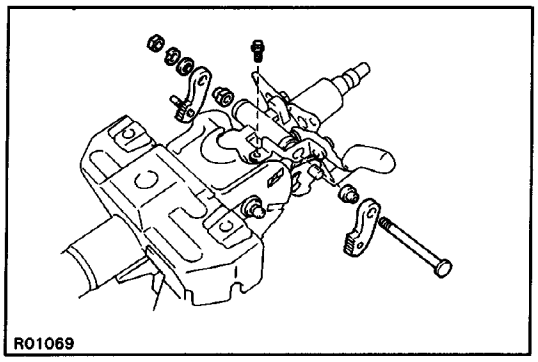

6. REMOVE TWO TILT PAWLS

(a) Remove the nut and bolt.

(b) Remove the two pawls with the collars.

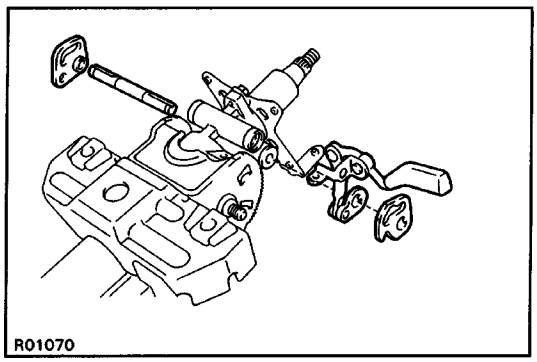

7. REMOVE TILT LEVER ASSEMBLY, TILT LEVER, TILT SUB LEVER AND LEVER LOCK BOLT

Remove one screw and tilt lever assembly.

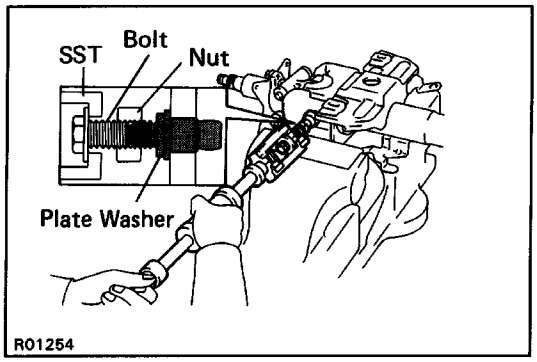

8. REMOVE UPPER COLUMN TUBE

(a) Set SST, the nut (10 mm nominal diameter, 1.25 mm pitch), plate washer (36 mm outer diameter) and bolt (10 mm nominal diameter, 1. 25 mm pitch, 50 mm length) as shown. And then remove the two bolts.

SST 09910–00015 (09911–00011, 09912–00010)

(Reference) Nut 90170–10004

Plate washer 90201–10201

Bolt 91111–51050

(b) Remove the upper column tube from the lower col–umn tube.

(c) Remove the stopper.

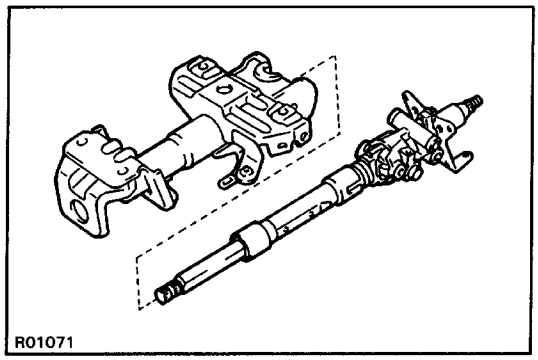

9. REMOVE TURN SIGNAL BRACKET

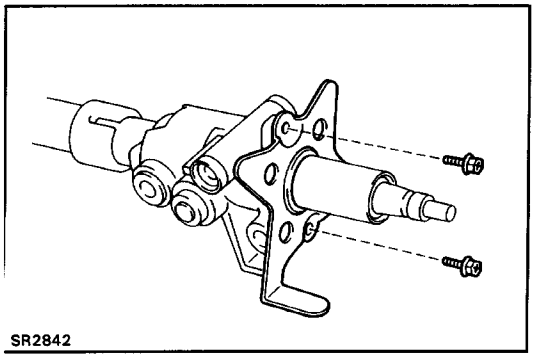

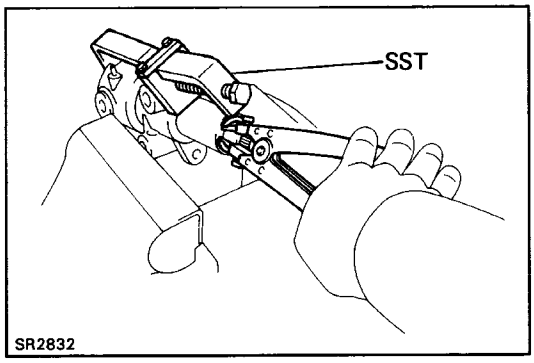

10. REMOVE MAIN SHAFT

(a) Using SST to hold the main shaft, remove the snap ring with snap ring pliers.
SST 09950–20017

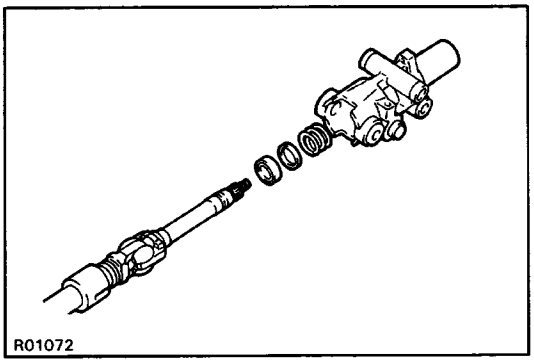

(b) Remove the main shaft from the column tube.
(c) Remove the spring, thrust collar and bearing.

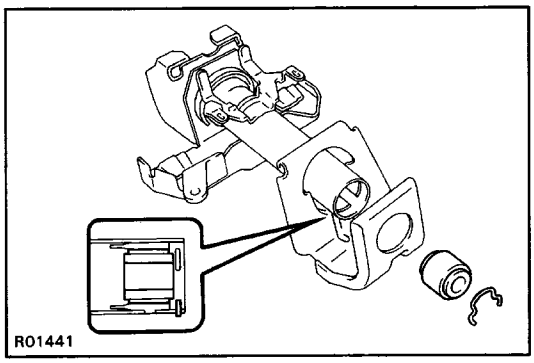

11. REMOVE MAIN SHAFT COLLAR

(a) Remove the snap ring from the lower column tube.
(b) Remove the main shaft collar.

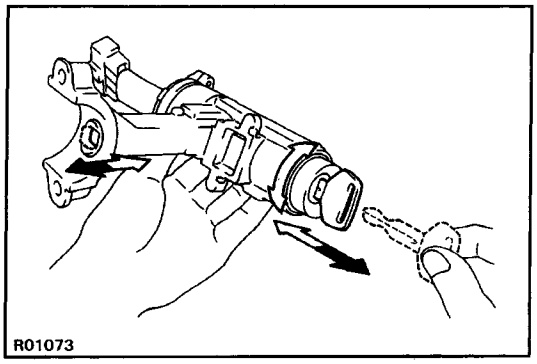

INSPECTION AND REPLACEMENT OF STEERING COLUMN

1. INSPECT KEY CYLINDER

Check that the steering lock mechanism operates properly.

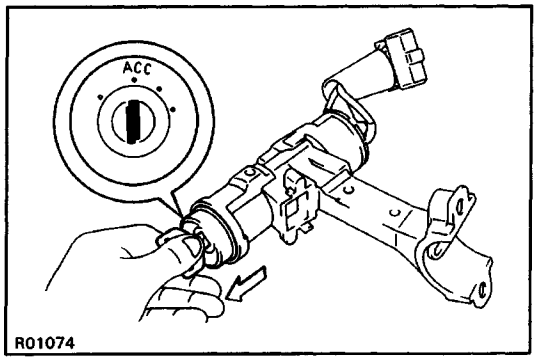

2. 1F NECESSARY, REPLACE KEY CYLINDER

(a) Place the ignition key at the ACC position.

(b) Push down the stop key with a thin rod, and pull out the key cylinder.

(c) Make sure that the ignition key is at the ACC position.

(d) Install a new key cylinder.

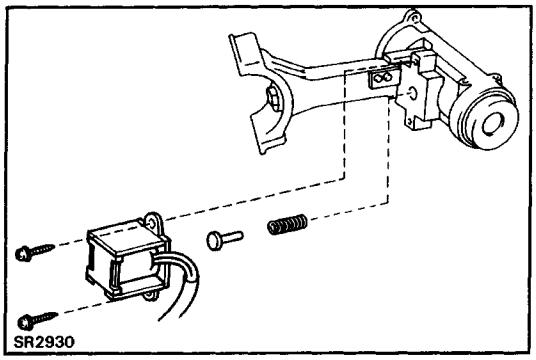

3. INSPECT KEY INTERLOCK SOLENOID

(See page AT–214)

4. IF NECESSARY, REPLACE KEY INTERLOCK SOLENOID

(a) Remove the two screws.

(b) Remove the solenoid, spring and lock pin.

(e) Install a new solenoid with the spring and lock pin, and install the two screws.

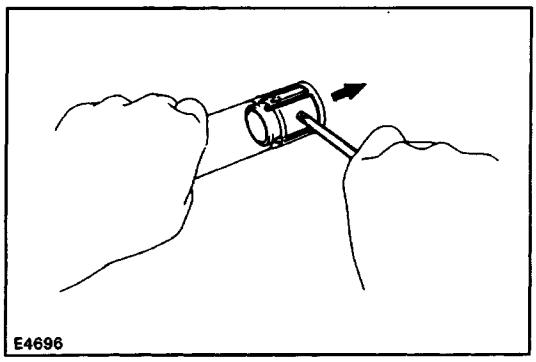

5. IF NECESSARY, REPLACE MAIN SHAFT BUSHING

(a) Using a screwdriver, remove the bushing.

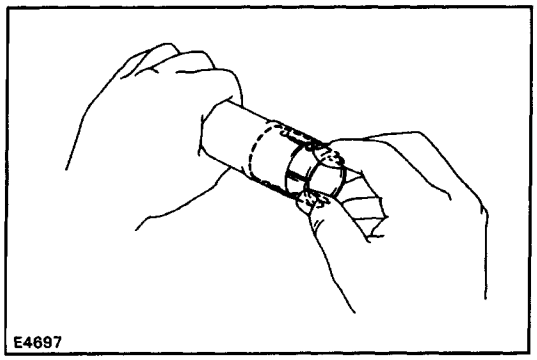

(b) Align the holes of the tube and the projections of a new bushing, and install the bushing in the column tube.

ASSEMBLY OF TILT STEERING COLUMN

(See page SR–9)

1. COAT MOLYBDENUM DISULPHID LITHIUM BASE GREASE ON FOLLOWING PARTS:

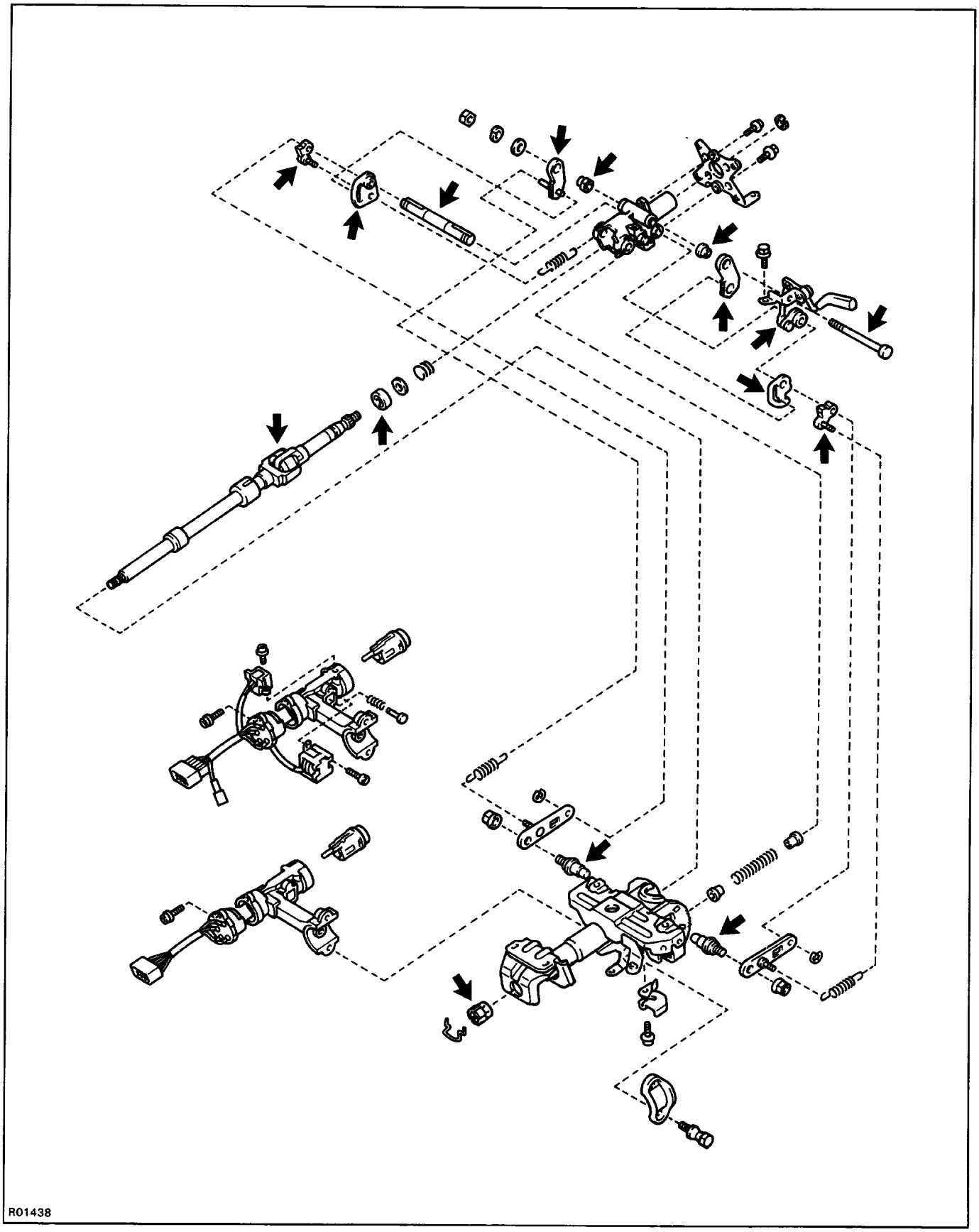

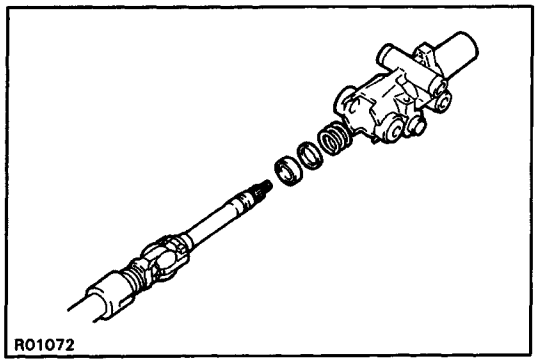

2. INSTALL MAIN SHAFT

(a) Install the main shaft with the bearing, collar and spring.

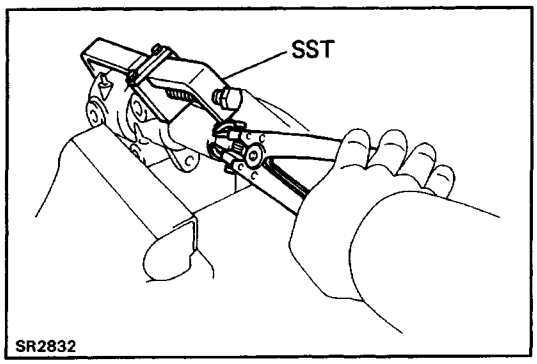

(b) Using SST to hold the main shaft, install the snap ring with snap ring pliers.
SST 09950–20017

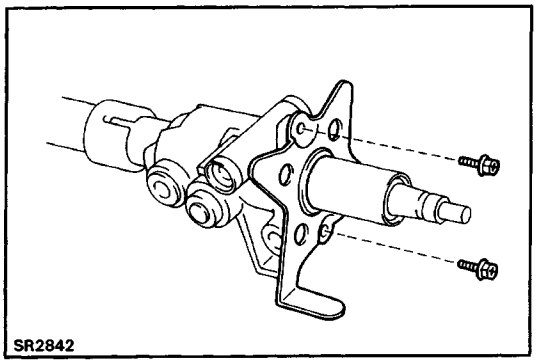

3. INSTALL TURN SIGNAL BRACKET

Install the two bolts.
Torque: 7.8 N–m (80 kgf–cm, 69in.–lbf)

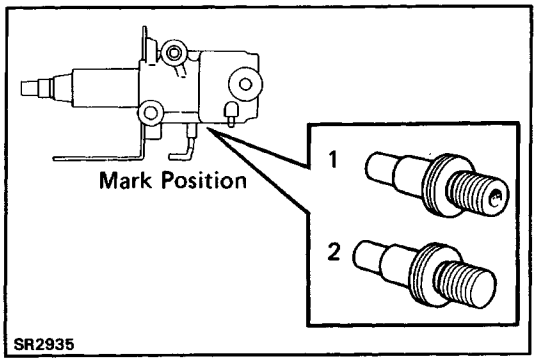

4. SELECT STEERING BOLT AND UPPER COLUMN TUBE

Select the bolt with center hole when the upper column tube mark is 1, and select the bolt without hole when the mark is 2.

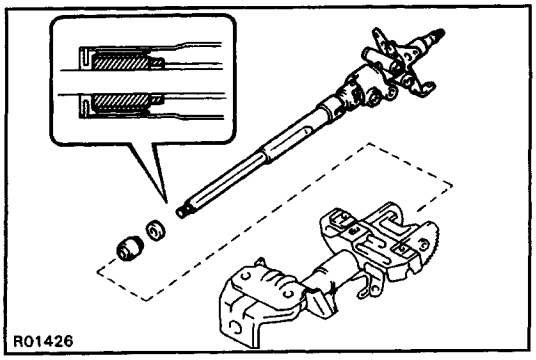

5. INSTALL MAIN SHAFT WITH UPPER COLUMN TUBE

(a) Install the stopper and main shaft collar to the main shaft as shown.
(b) Install the main shaft to the lower column tube.

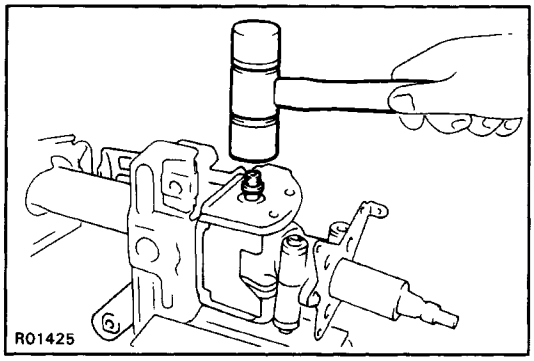

(c) Using a plastic hammer, drive in the steering bolts.

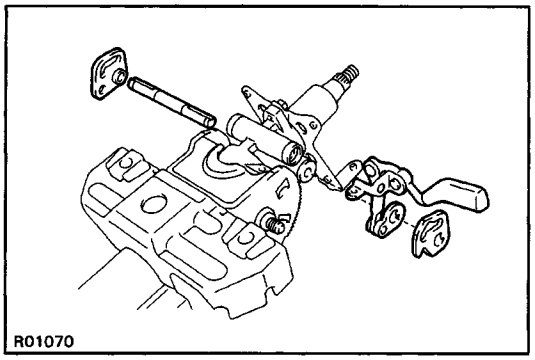

INSTALL TILT LEVER LOCK BOLT, TILT LEVER ASSEMBLY, TILT LEVER AND TILT SUB LEVER

(a) Install the tilt lever lock bolt to the upper column tube.
(b) Install the tilt lever assembly with the screw.
(c) Install the tilt lever and the tilt sub lever.

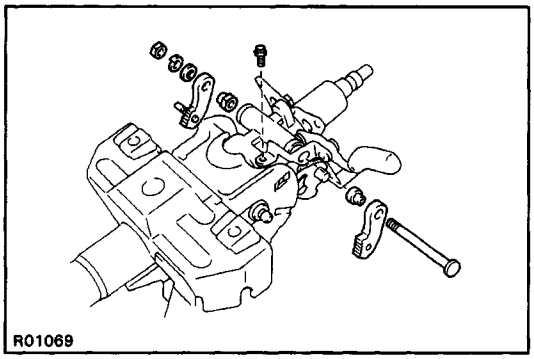

INSTALL TWO TILT PAWLS

Temporarily install the tilt pawls.

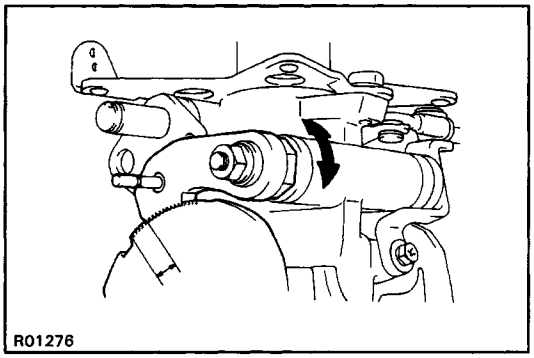

8. ENGAGE AND ADJUST TILT PAWL

(a) Engage the tilt sub lever side pawl to the center of the ratchet.
(b) While turning the tilt lever side collar, engage the tilt lever side pawl to the ratchet completely.
(c) Tighten the nut.
Torque: 5.9 N–m (60 kgf–cm, 52 in.–lbf)

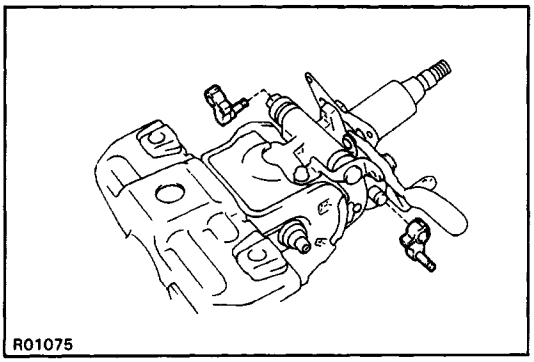

9. INSTALL TWO TILT PAWL STOPPERS

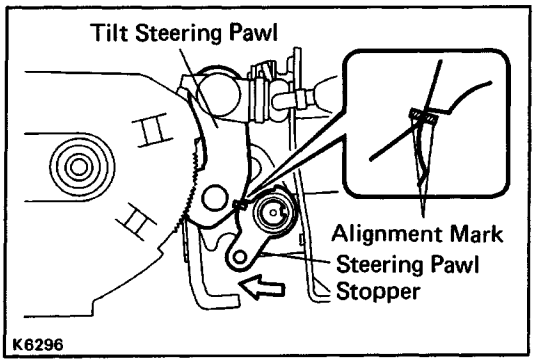

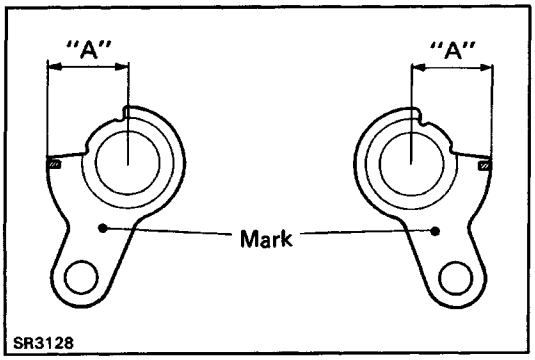

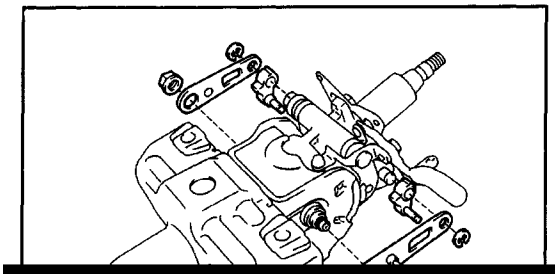

10. SELECT STEERING PAWL STOPPERS FOR BOTH SIDES

(a) With the steering lock pawl and the ratchet engaged, select and install two tilt steering pawl stoppers.

(b) Check that the alignment marks on the stopper and pawl align when the stopper is rotated to the pawl side.

(c) If the alignment marks do not align, select tilt steering pawl stoppers according to the following table.

Tilt lever side	Tilt sub lever side	Dimension "A" mm (in.)
1	A	12.65 – 12.75 (0.4980 – 0.5020)
2	B	12.55 – 12.65 (0.4941 – 0.4980)
3	C	12.45 – 12.55 (0.4902 – 0.4941)
4	D	12.35 – 12.45 (0.4862 – 0.4902)
5	E	12.25 – 12.35 (0.4823 – 0.4862)

(d) After selecting the stoppers, check that on both sides the pawl and ratchet are fully engaged.

11. INSTALL TWO TILT LEVER RETAINERS

(a) Install the two tilt lever retainers and torque the nuts.

Torque: 15 N–m (1150 kgf –cm, 11 ft–lbf)

(b) Install the E–rings.

[redacted]

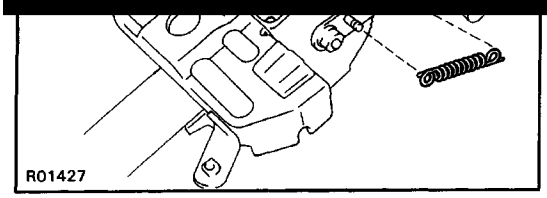

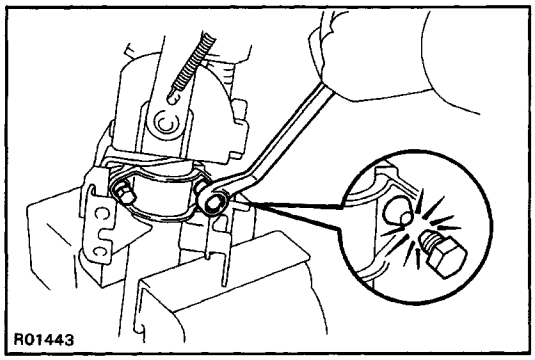

14. INSTALL UPPER COLUMN BRACKET

(a) Install the upper column bracket with new two tapered–head bolts.

(b) Tighten the tapered–head bolts until the bolt heads break off.

15. CHECK OPERATION OF TILT STEERING LEVER AND SUPPORT

(a) Check that there is no axial play at the end of the main shaft.

(b) with the main shaft in the neutral position, raise the tilt lever and check that the main shaft rises to the uppermost position.

(c) Lower the main shaft, and check that it locks in the lowermost position.

MANUAL GEAR HOUSING (2WD)

REMOVAL AND INSTALLATION OF MANUAL GEAR HOUSING

Remove and install the parts as shown.

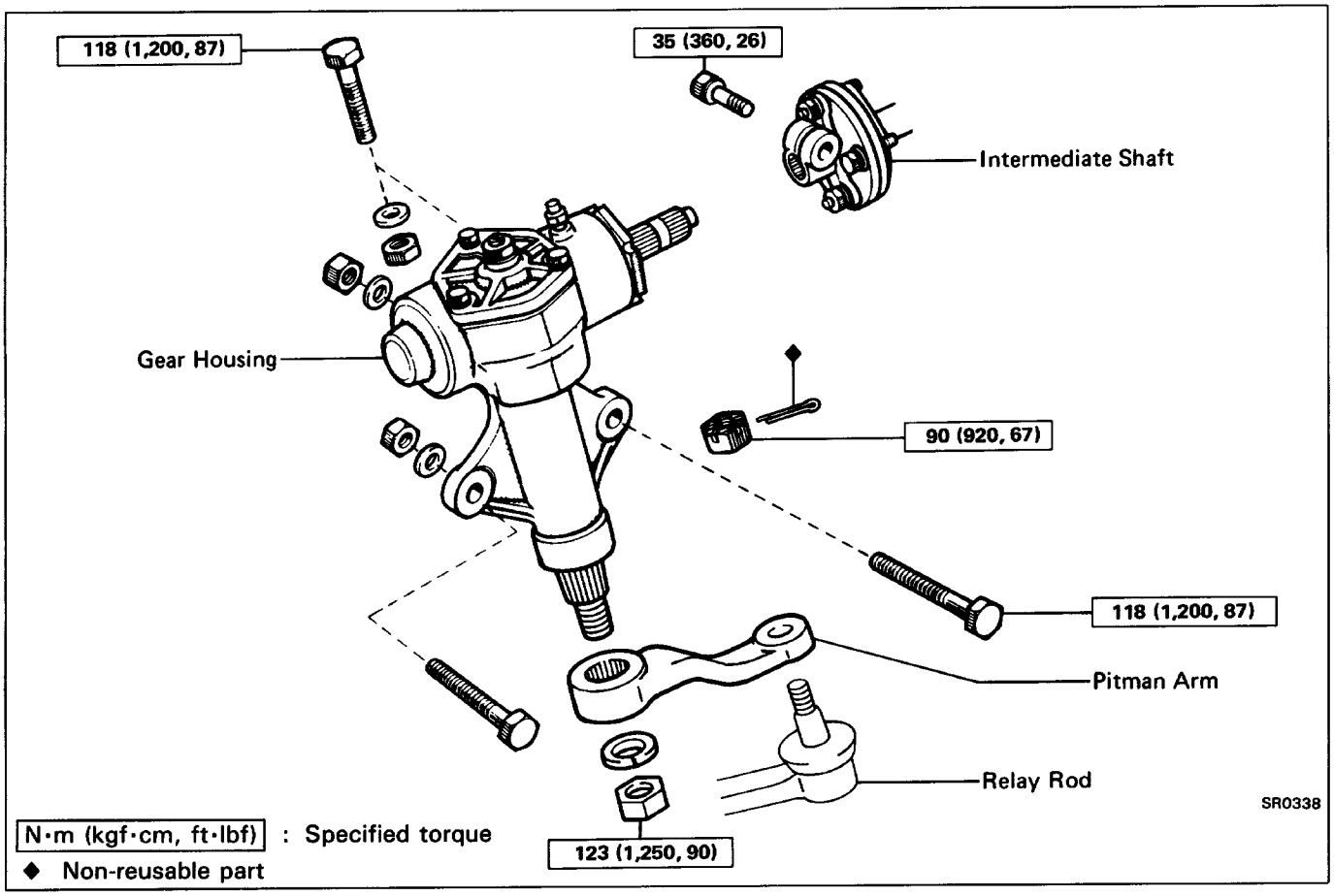

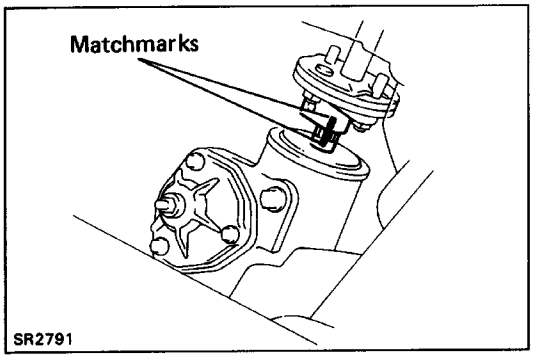

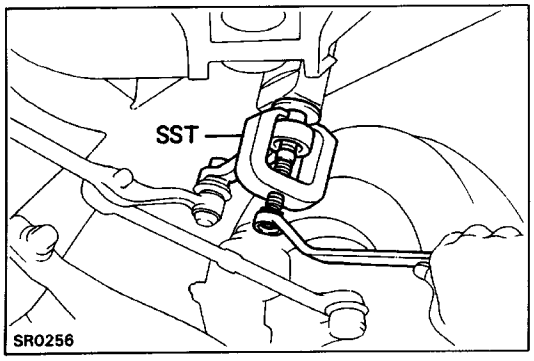

(MAIN POINTS OF REMOVAL AND INSTALLATION)

1. DISCONNECT UNIVERSAL JOINT

(a) Loosen the column side set bolt.

(b) Remove the gear side set bolt.

(c) Place matchmarks on the flexible coupling and worm shaft.

(d) Slide the shaft rearward to disconnect the shaft from the worm shaft.

2. DISCONNECT PITMAN ARM FROM GEAR HOUSING

(a) Loosen the pitman arm nut.

(b) Using SST, disconnect pitman arm from the gear housing.
SST 09610–55012

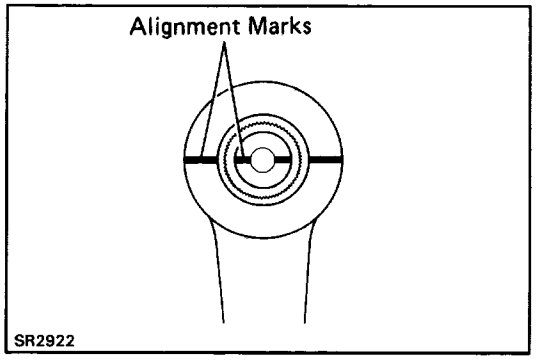

3. CONNECT PITMAN ARM TO GEAR HOUSING

(a) Align the alignment marks on the sector shaft and pitman arm and install the spring washer and arm.

(b) Tighten the pitman arm nut.

Torque: 123 N–m (1,250 kgf–cm, 90 ft–lbf)

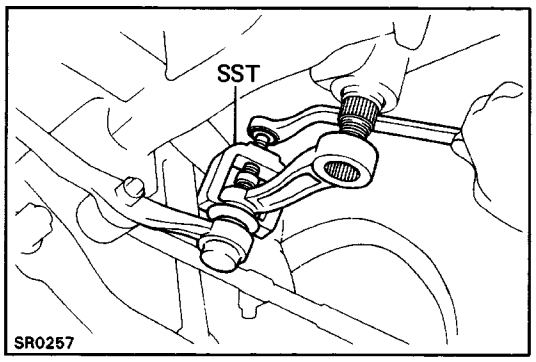

4. DISCONNECT PITMAN ARM FROM RELAY ROD

Using SST, disconnect the pitman arm from the relay rod.
SST 09611–22012

COMPONENTS

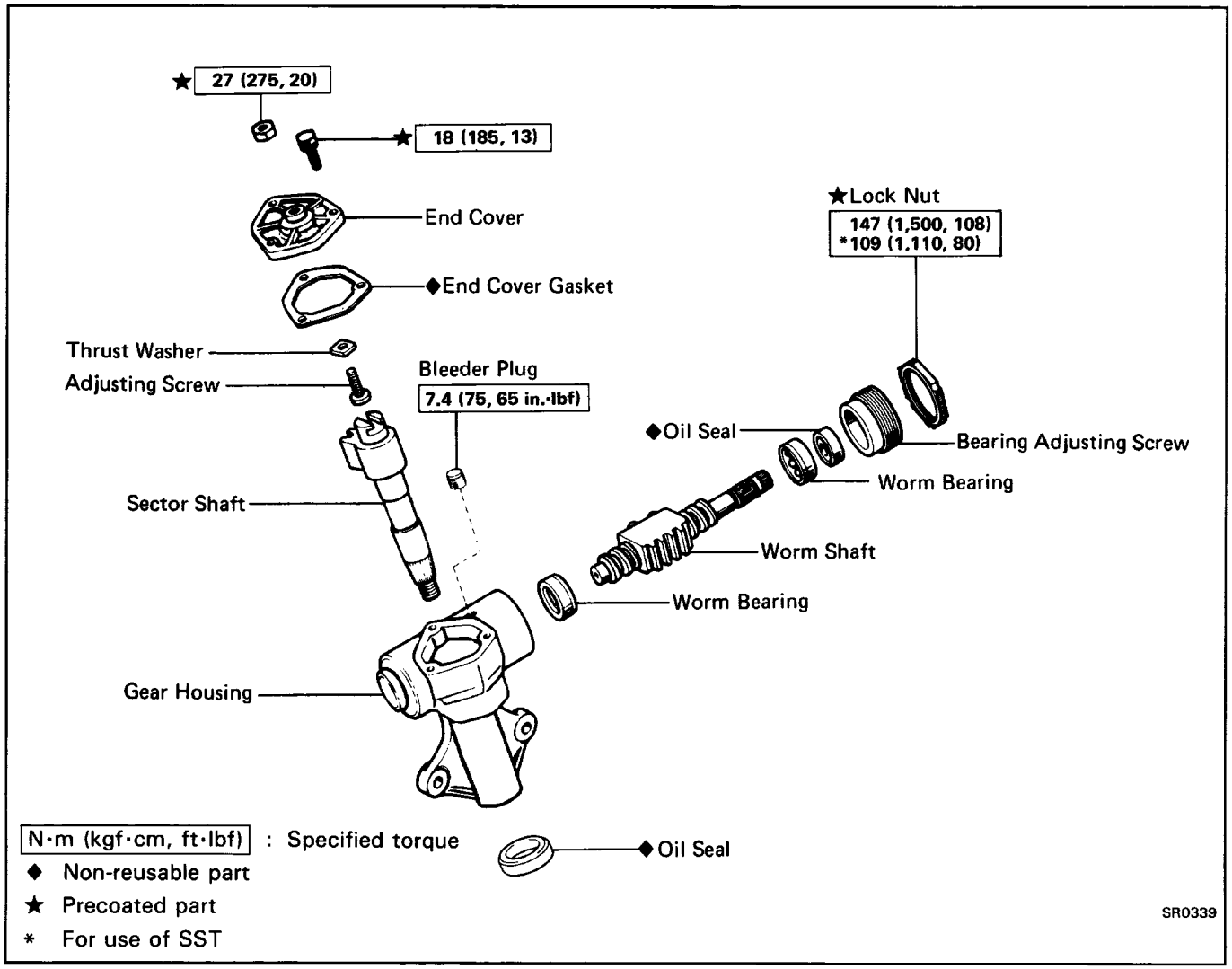

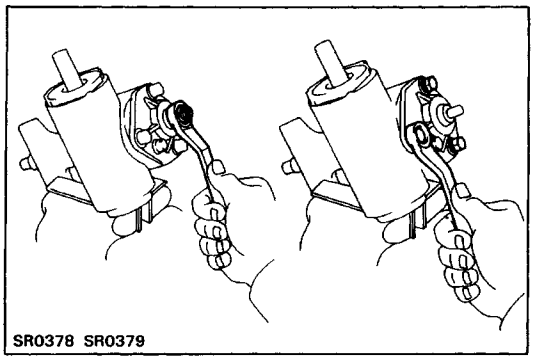
SR0378 SR0379

DISASSEMBLY OF MANUAL GEAR HOUSING

1. REMOVE BLEEDER PLUG AND DRAIN GEAR OIL

2. REMOVE END COVER AND SECTOR SHAFT

(a) Remove the adjusting screw lock nut and three bolts.

(b) Remove the end cover by turning the adjusting screw clockwise with a screwdriver.

(c) Pull out the sector shaft and adjusting screw from the gear housing.

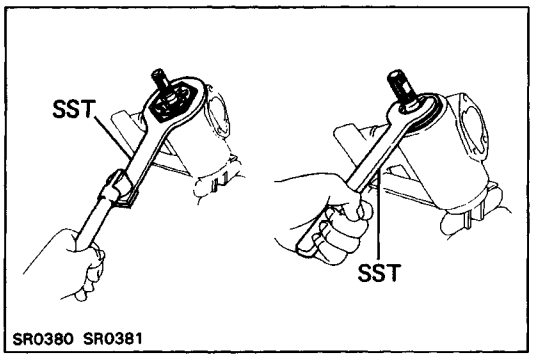

SR0380 SR0381

3. REMOVE LOCK NUT

Using SST, remove the lock nut.
SST 09617–22020

4. REMOVE BEARING ADJUSTING SCREW

Using SST, remove the adjusting screw.
SST 09616–30011

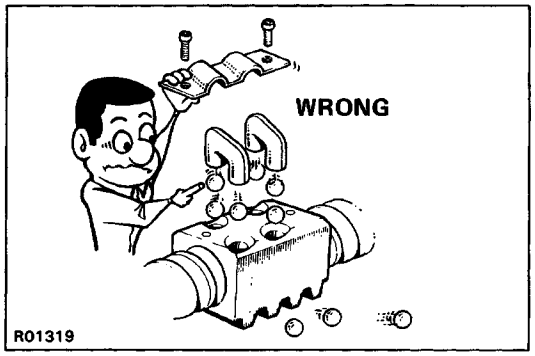

R01319

5. REMOVE WORM SHAFT

Pull the worm shaft out of the gear housing.
NOTICE: Do not disassemble the ball nut from the worm shaft.

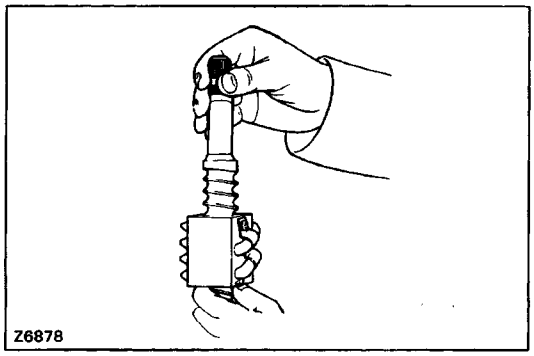
Z6878

INSPECTION AND REPLACEMENT OF MANUAL GEAR HOUSING

1. INSPECT WORM AND BALL NUT

(a) Check the worm and ball nut for wear or damage.

(b) Check that the nut rotates smoothly down the shaft by its own weight.
If a problem is found, repair or replace the worm.

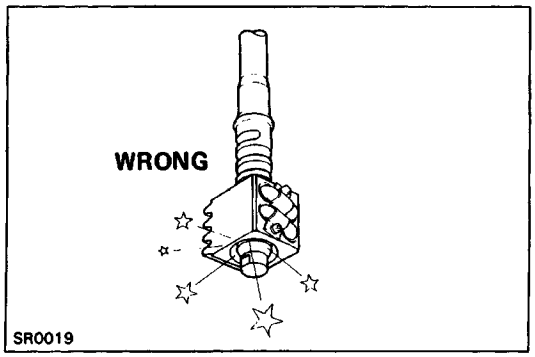

SR0019

NOTICE: Do not allow the ball nut to hit the end of the worm shaft.

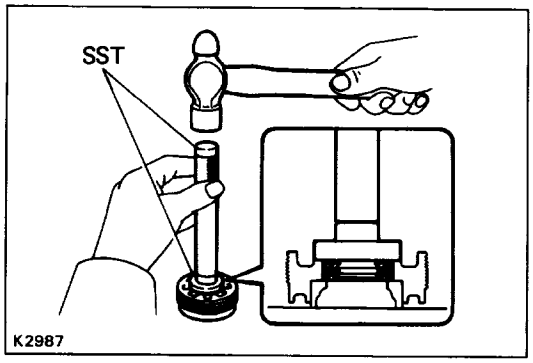

2. INSPECT WORM BEARINGS AND OIL SEAL

Check for wear or damage.
If a problem is found, replace the bearings, bearing races and oil seal.

3. IF NECESSARY, REPLACE OIL SEAL

(a) Remove the oil seal with a screwdriver.
(b) Using SST, install a new oil seal.
SST 09620–30010 (09627–30010, 09631–00020)

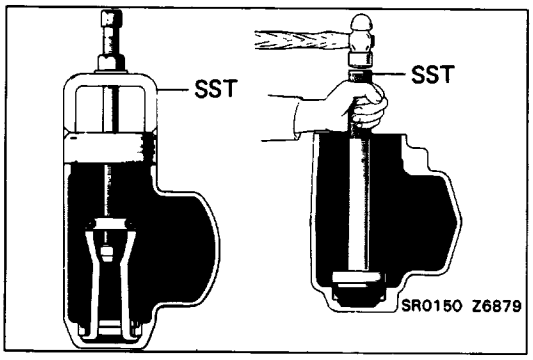

4. IF NECESSARY, REPLACE OUTER RACE IN GEAR HOUS–ING

(a) Using SST, remove the outer race from the housing.
SST 09612–65014 (09612–01030)
(b) Using SST, install a new outer race into the housing.
SST 09620–30010 (09626–30010, 09631–00020)

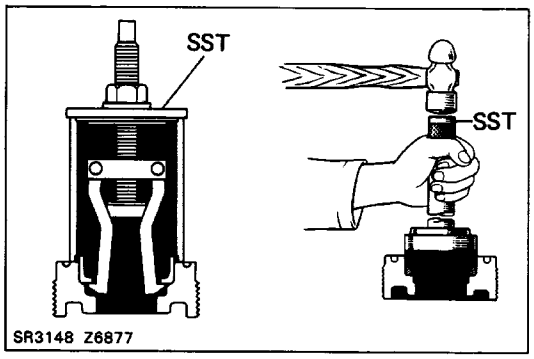

5. IF NECESSARY, REPLACE OUTER RACE 1N ADJUSTING NUT

(a) Remove the oil seal with a screwdriver.
(b) Using SST, remove the outer race from the nut.
SST 09612–30012
(c) Using SST, install a new race into the nut.
SST 09620–30010 (09626–30010, 09631–00020)
(d) Using SST, install a new oil seal into the nut.
SST 09620–30010 (09627–30010, 09631–00020)

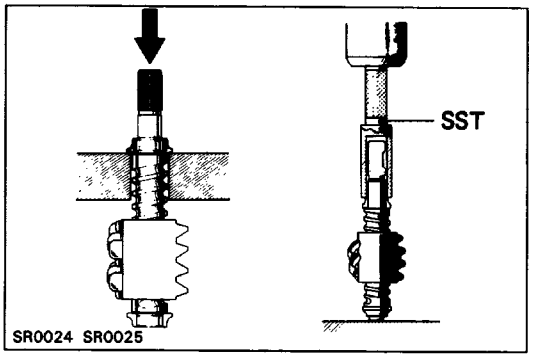

6. IF NECESSARY, REPLACE INNER RACE ON WORM SHAFT

(a) Using a press, remove the inner races from the shaft.
(b) Using SST, press new inner races onto the shaft.
SST 09620–30010 (09623–30010)

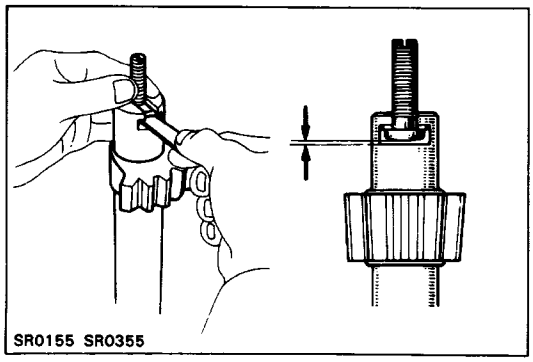

7. INSPECT SECTOR SHAFT

Measure shaft thrust clearance with a feeler gauge.
Maximum clearance: 0.05 mm (0.0020 in.) or less
If necessary, install a new thrust washer which will pro–vide the minimum clearance between the sector shaft and the adjusting screw.
Thrust washer thickness

Thickness mm (in.)		Thickness mm (in.)	
1.95	(0.0768)	2.10	(0.0827)
2.00	(0.0787)	2.15	(0.0847)
2.05	(0.0807)		

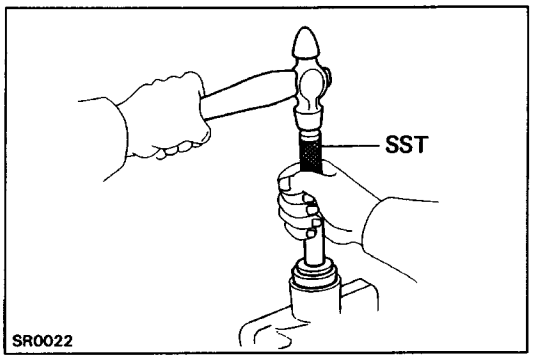

8. IF NECESSARY, REPLACE OIL SEAL

(a) Remove the oil seal with a screwdriver from the gear housing.

(b) Using SST and a hammer, install a new oil seal.
SST 09630–00012 (09631–00020, 09631–00090)

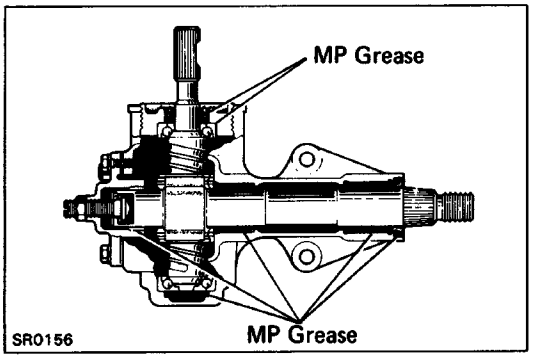

ASSEMBLY OF STEERING GEAR HOUSING
(See page SR–19)

1. APPLY MP GREASE TO BUSHING, NEEDLE ROLLER BEARING AND OIL SEALS

2. INSTALL WORM SHAFT INTO GEAR HOUSING

Place the worm bearings on the shaft and install the shaft into the housing.

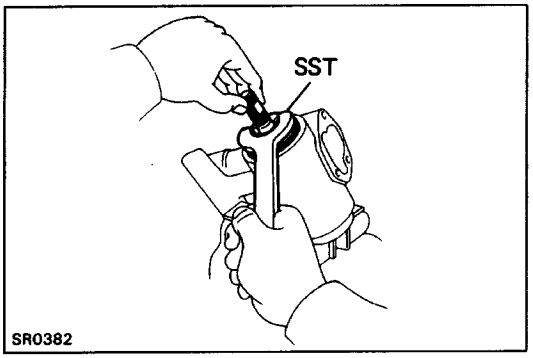

3. INSTALL AND ADJUST BEARING ADJUSTING SCREW

(a) Using SST, gradually tighten the adjusting screw until it is snug.
SST 09616–30020

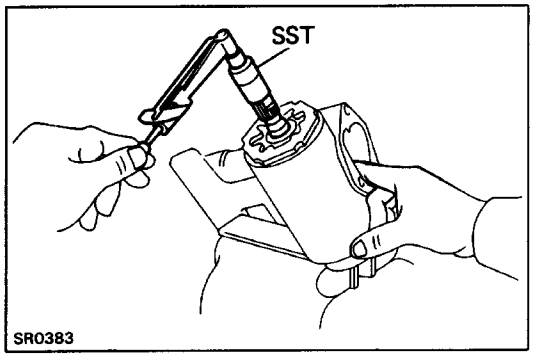

(b) Using a torque meter and SST, measure the bearing preload in both directions. Turn the adjusting screw until the preload is correct.
Preload (Starting): 0.3 – 0.5 N–m
(3 – 5 kgf–cm, 2.6 – 4.3 in.–lbf)
SST 09616–00010

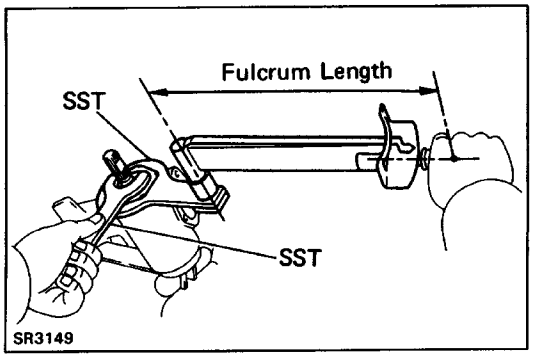

(c) Apply sealant to the lock nut.
Sealant: Part No.08833–00080, THREE BOND 1344, LOCTITE 242 or equivalent

(d) Hold the adjusting screw in position with SST and tighten the lock nut with SST.
Torque: 147 N–m (1,500 kgf–cm, 108 ft–lbf)
SST 09616–30011 and 09617–22020
HINT:

- Check that the bearing preload is still correct.
- Use a torque wrench with a fulcrum length of 425 mm (16.73 in.).

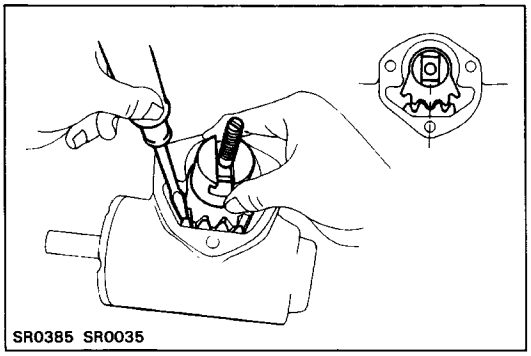

4. INSTALL SECTOR SHAFT

(a) Install the adjusting screw and thrust washer onto the sector shaft.

(b) Set the ball nut at the center of the worm shaft. Install the sector shaft into the gear housing so that the center teeth mesh together.

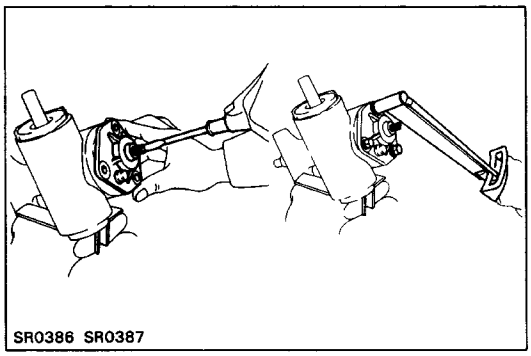

5. INSTALL END COVER

(a) Install the end cover over a new gasket.

(b) Using a screwdriver, loosen the adjusting screw as far as possible.

(c) Apply sealant to the bleeder plug side cover bolt.

Sealant: Part No. 08833–00080, THREE BOND 1344, LOCTITE 242 or equivalent

(d) Torque the three cover bolts.

Torque: 18 N–m (185 kgf–cm, 13 ft–lbf)

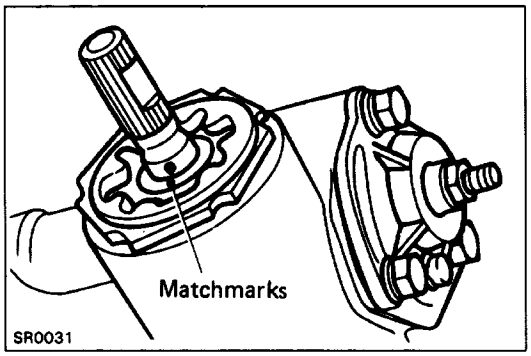

6. PLACE WORM SHAFT IN NEUTRAL POSITION

(a) Count the total shaft rotations and turn the shaft back half of that number.

(b) The worm shaft is now in neutral position.

(c) Place matchmarks on the worm shaft and housing to show neutral position.

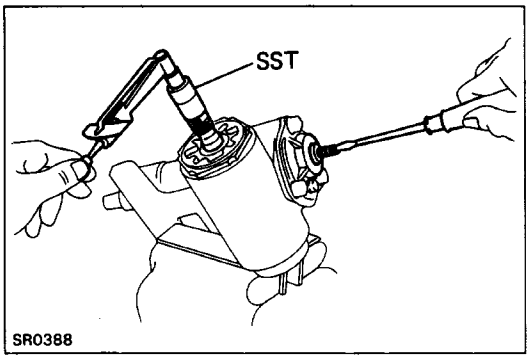

7. ADJUST TOTAL PRELOAD

Using a torque meter and SST, turn the adjusting screw while measuring the preload until it is correct.

HINT: Be sure that the worm shaft is in neutral position.

Preload (Starting): 0.8 – 1.0 N–m (8 – 10.5 kgf–cm, 6.9 – 9.1 in.–lbf)

SST 09616–00010

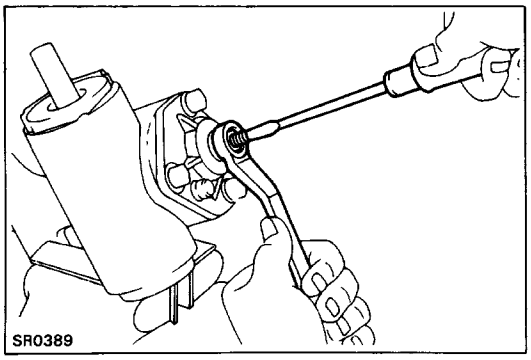

8. TIGHTEN ADJUSTING SCREW LOCK NUT

(a) Apply sealant to the lock nut.

Sealant: Part No. 08833–00080, THREE BOND 1344, LOCTITE 242 or equivalent

(b) Hold the screw with a screwdriver while tightening the lock nut.

(c) Torque the lock nut.

Torque: 27 N–m (275 kgf–cm, 20 ft–lbf)

HINT: Check that the preload is still correct.

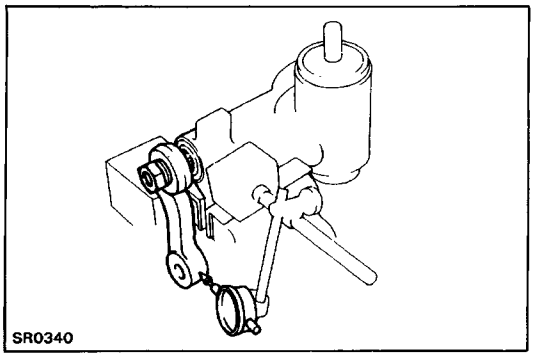

9. MEASURE SECTOR SHAFT BACKLASH

Install a dial indicator. Check that the sector shaft has no backlash within 100 degrees of the left and right sides from neutral position.

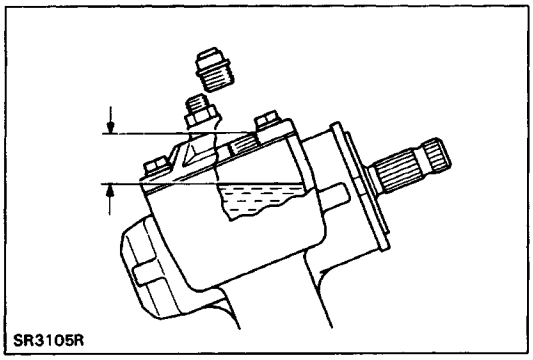

10. REPLENISH WITH GEAR OIL

Oil type:	**API GL–4, SAE 90**
Capacity:	**380 – 400 cc (23.2 – 24.4 cu in.)**
Oil level:	**(at installation)**
	18 – 28 mm (0–71 – 1.10 in.) from top

11. INSTALL BLEEDER PLUG

Torque: 7.4 N–m (75 kgf–cm, 65 in.–lbf)

MANUAL GEAR HOUSING (4WD)

REMOVAL AND INSTALLATION OF MANUAL GEAR HOUSING

Remove and install the parts as shown.

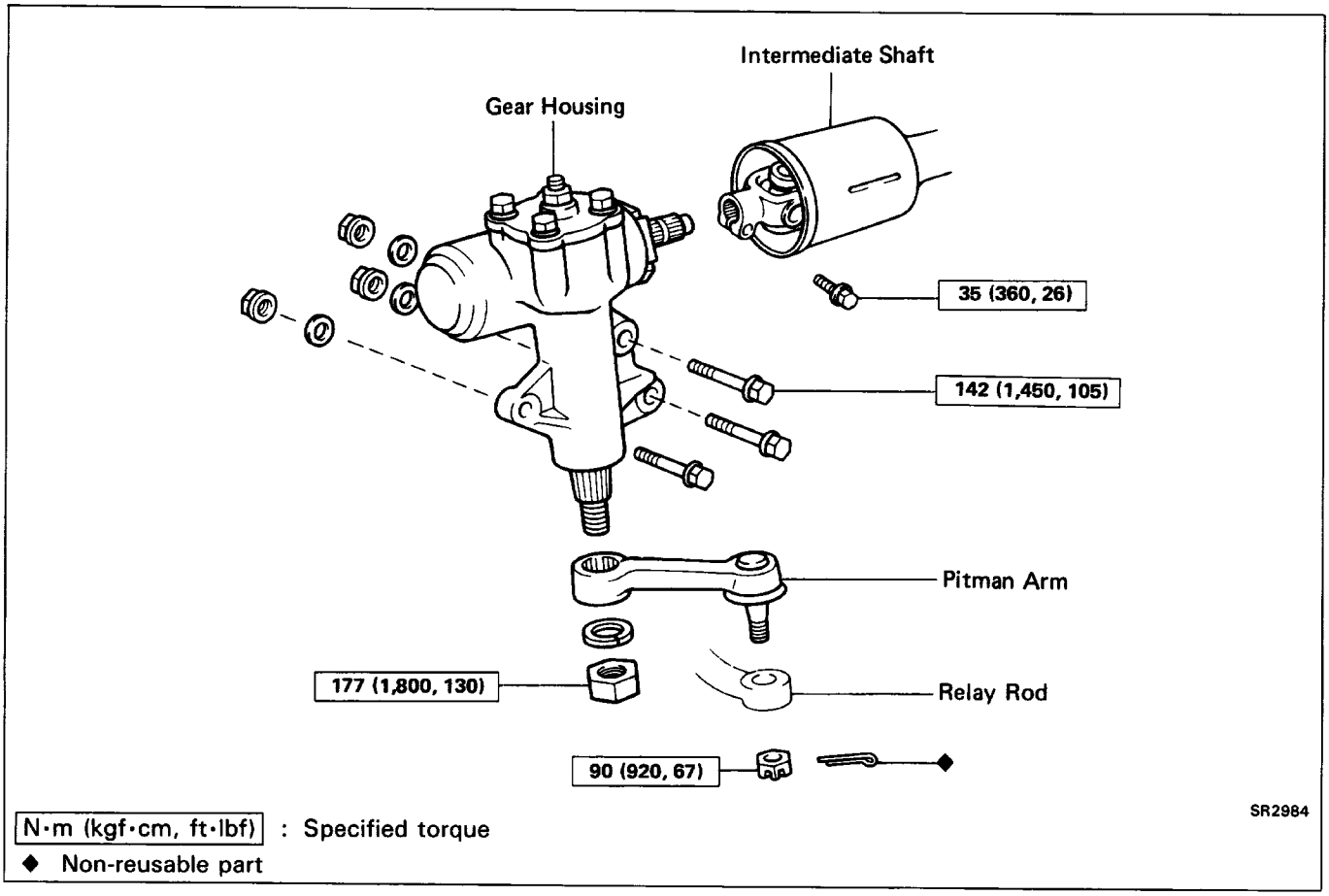

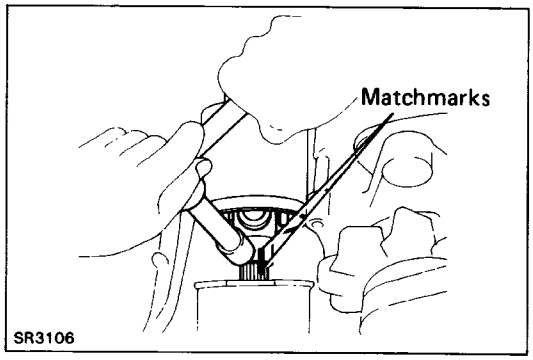

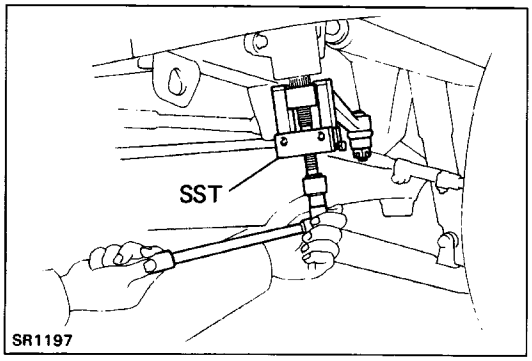

(MAIN POINTS OF REMOVAL AND INSTALLATION)

1. DISCONNECT UNIVERSAL JOINT

(a) Loosen the column side set bolt.

(b) Remove the gear side set bolt.

(e) Place matchmarks on the universal joint and worm shaft.

(d) Slide the shaft rearward to disconnect the shaft from the worm shaft.

2. DISCONNECT PITMAN ARM FROM GEAR HOUSING

(a) Loosen the pitman arm set nut.

(b) Using SST, disconnect the pitman arm from the gear housing.
SST 09628–62011

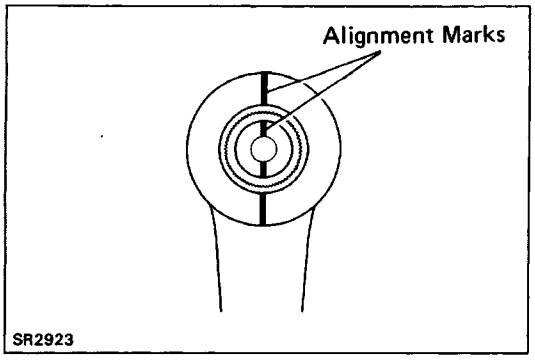

3. CONNECT PITMAN ARM TO GEAR HOUSING

Align alignment marks on the pitman arm and the sector shaft, and install the spring washer and nut.

Torque: 177 N–m (1,800 kgf–cm, 130 ft–lbf)

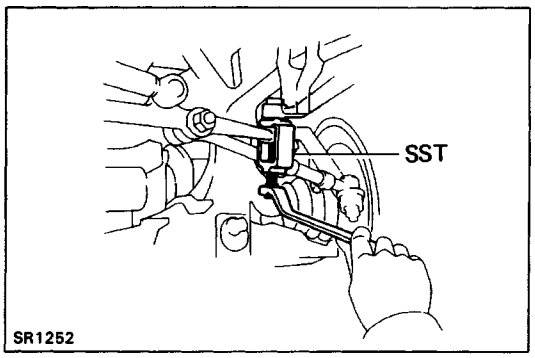

4. DISCONNECT PITMAN ARM FROM RELAY ROD

(a) Remove the cotter pin and set nut.

(b) Using SST, disconnect the pitman arm from the re–lay rod.
SST 09611–22012

COMPONENTS

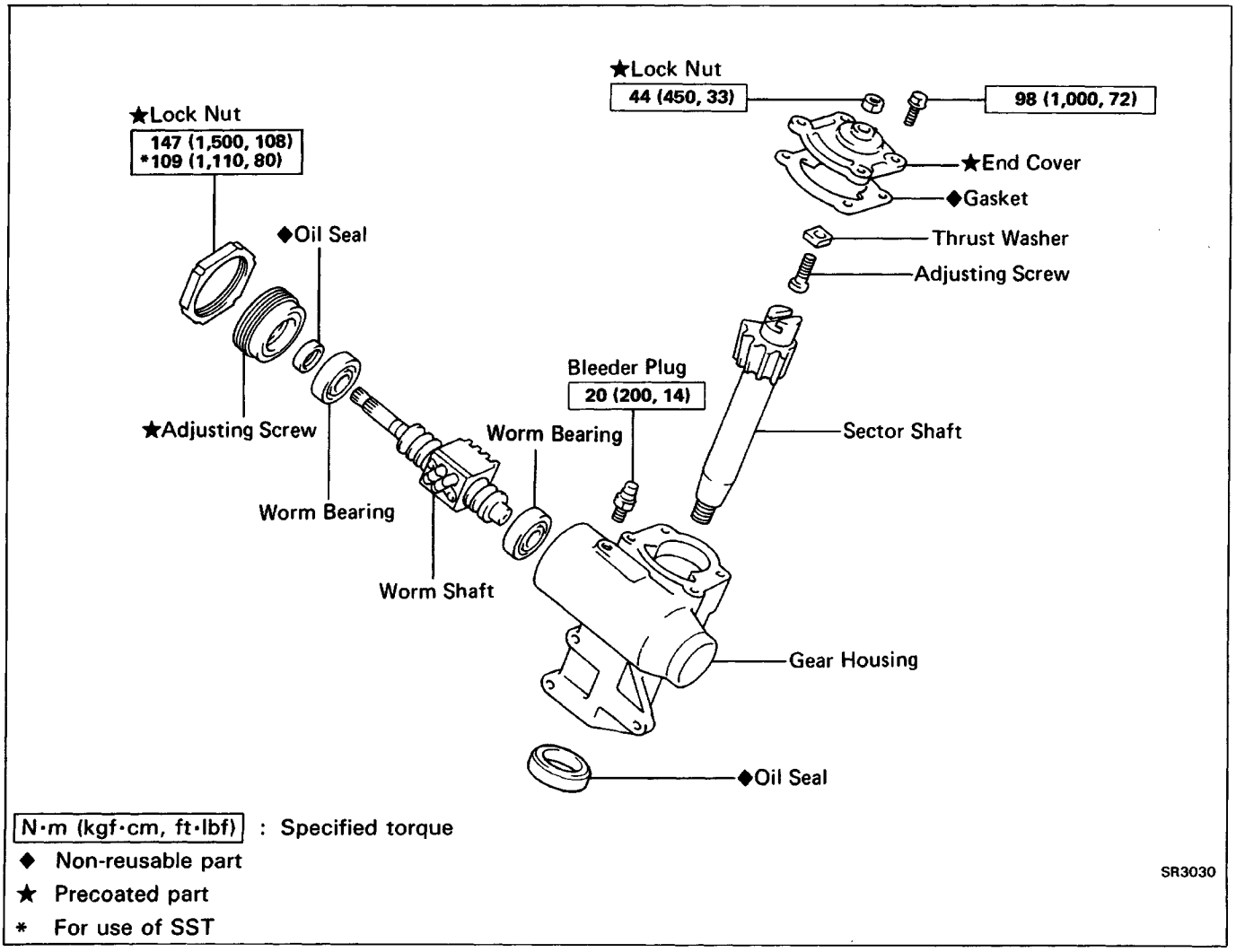

DISASSEMBLY OF MANUAL GEAR HOUSING

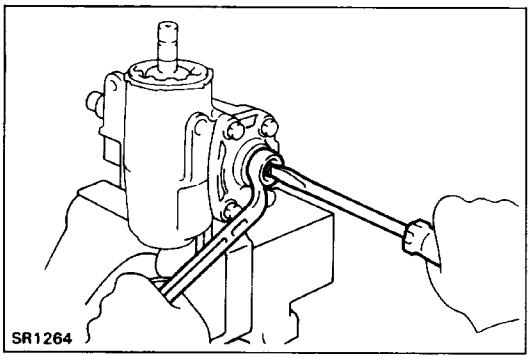

1. REMOVE BLEEDER PLUG AND DRAIN GEAR OIL

2. REMOVE END COVER

(a) Remove the adjusting screw lock nut and four bolts.

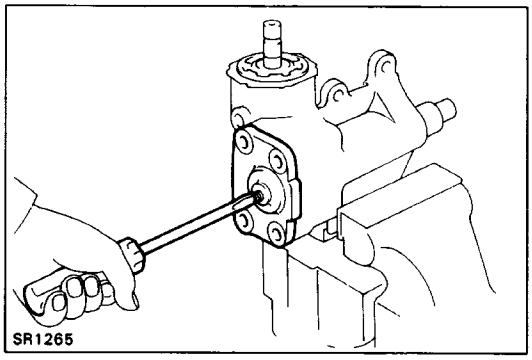

(b) Remove the end cover by turning the adjusting screw clockwise.

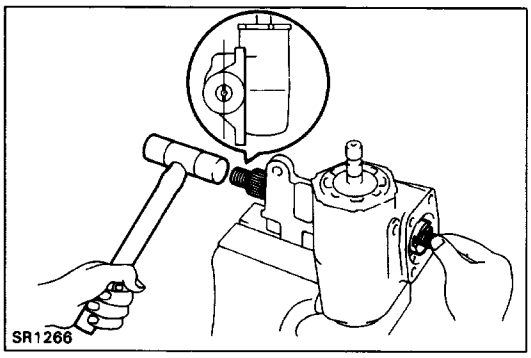

3. REMOVE SECTOR SHAFT

(a) Using a plastic hammer, tap out the sector shaft.
(b) Remove the sector shaft.

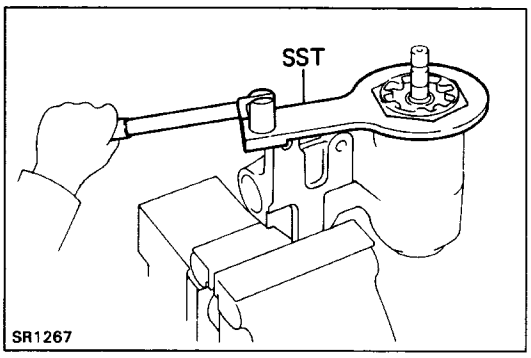

4. REMOVE WORM BEARING ADJUSTING SCREW LOCK NUT

Using SST, remove the lock nut.
SST 09617–60010

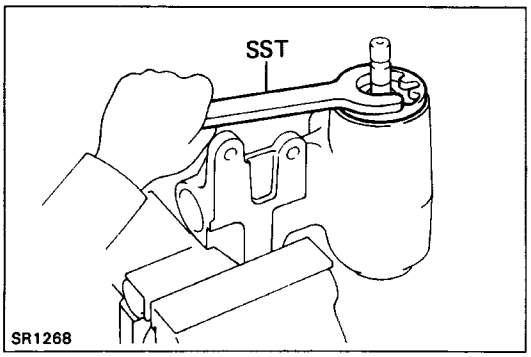

5. REMOVE WORM BEARING ADJUSTING SCREW

Using SST, remove the adjusting screw.
SST 09616–22010

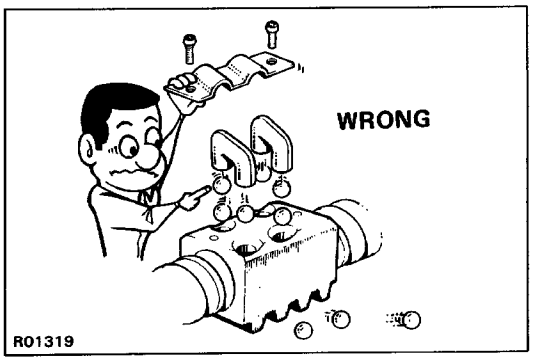

6. REMOVE WORM SHAFT

Pull the worm shaft out of the gear housing.

NOTICE: Do not disassemble the ball nut from the worm shaft.

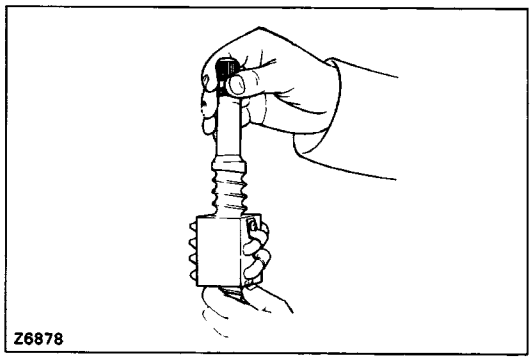

INSPECTION AND REPLACEMENT OF MANUAL GEAR HOUSING

1. INSPECT WORM AND BALL NUT

(a) Check the worm and ball nut for wear or damage.

(b) Check that the nut rotates smoothly down the shaft by its own weight.
If a problem is found, repair or replace the worm.

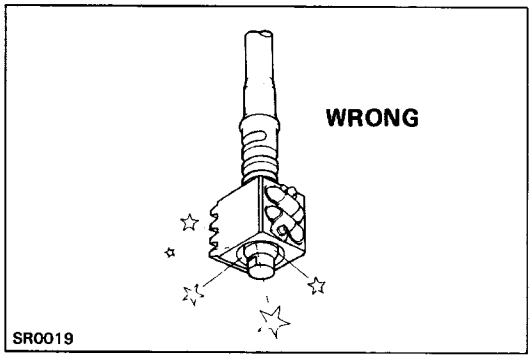

NOTICE: Do not allow the ball nut to hit the end of the worm shaft.

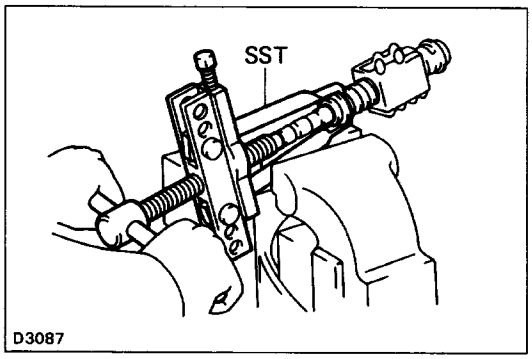

2. IF NECESSARY, REPLACE WORM BEARING INNER RACE

(a) Using SST, remove the both side bearing inner races.
SST 09950–20017

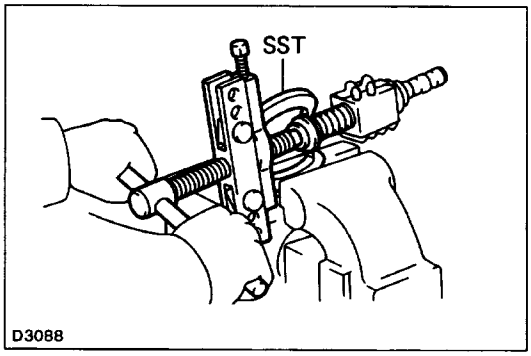

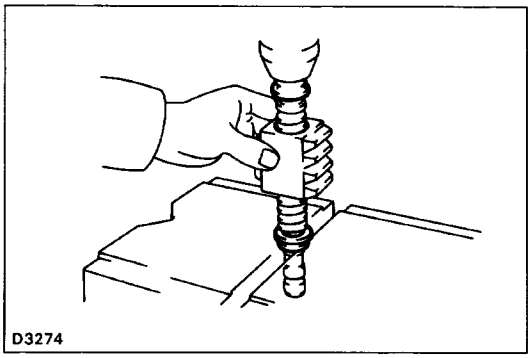

(b) Using a press, install new bearing inner races.
NOTICE: Be careful not to damage the ball nut while holding it with hand.

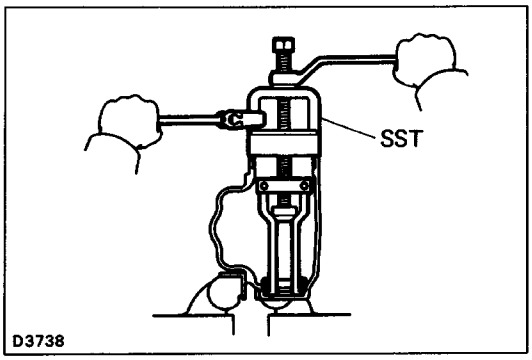

(c) Using SST, remove the outer race from the gear housing.
SST 09612–65014 (09612–01030)

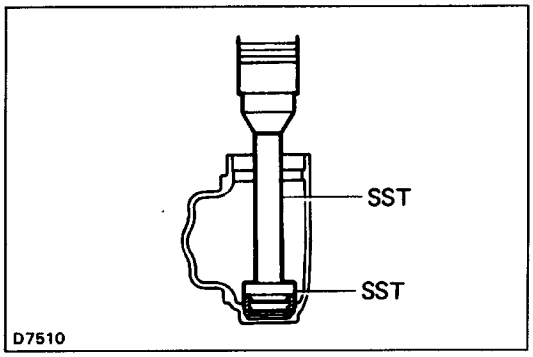

(d) Using SST, press in a new outer race into the gear housing.
SST 09550–10012 (09552–10010, 09559–10010)

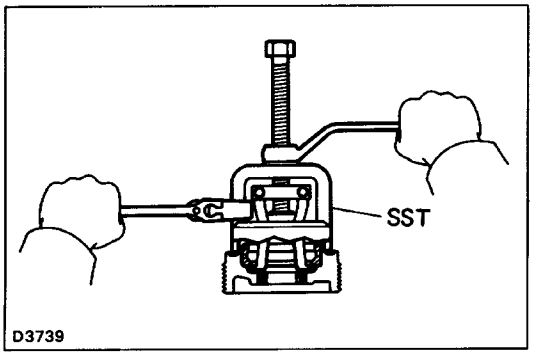

(e) Using SST, remove the outer race from the adjusting screw.
SST 09612–65014 (09612–01040)

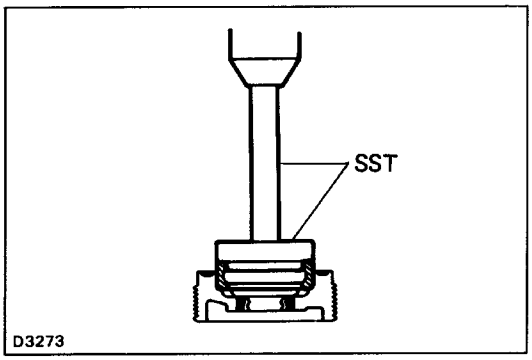

(f) Using SST, press in a new outer race into the adjust–ing screw.
SST 09550–10012 (09552–10010, 09559–10010)

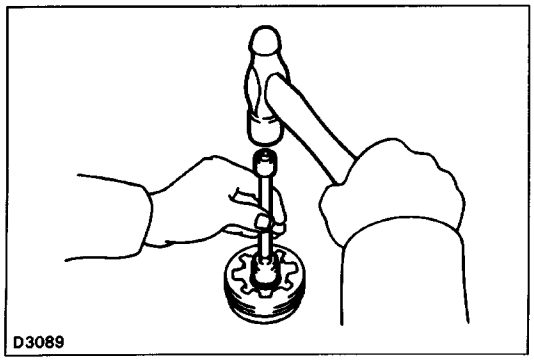

3. IF NECESSARY, REPLACE ADJUSTING SCREW OIL SEAL

(a) Using a socket wrench, drive out the oil seal.

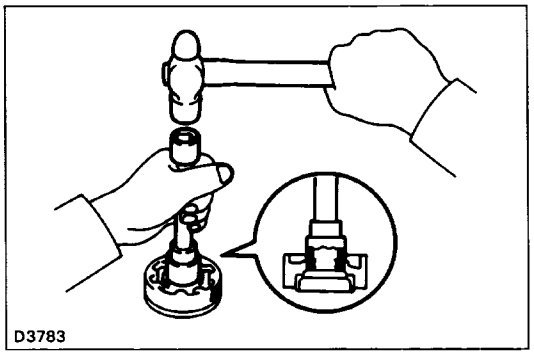

(b) Using a socket wrench, drive in a new oil seal.

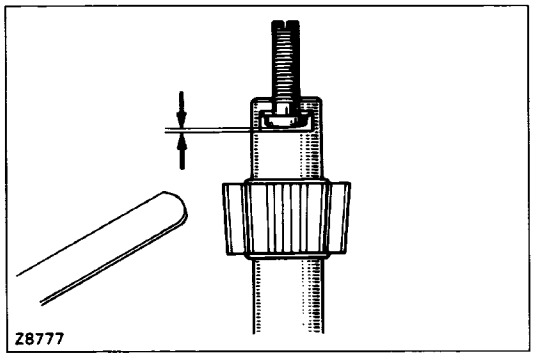

4. MEASURE SECTOR SHAFT THRUST CLEARANCE

Using a feeler gauge, measure the shaft thrust clearance.

Maximum clearance: 0.05 mm (0.0020 in.) or less

If necessary, install a new thrust washer to provide the minimum clearance between the sector shaft and adjust–ing screw.

Thrust washer thickness mm (in.)			
1.95	(0.0768)	2.05	(0.0807)
2.00	(0.0787)		

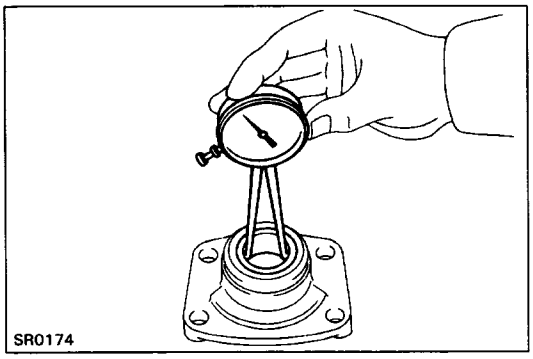

5. INSPECT SECTOR SHAFT END COVER

(a) Check for damage.

(b) Check the bushing for wear or damage.

(c) Measure the bushing inside diameter.

Maximum inside diameter: 36.07 mm (1.4201 in.)

If necessary, replace the end cover.

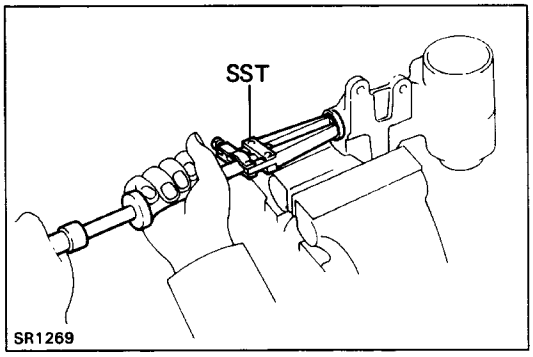

6. IF NECESSARY, REPLACE GEAR HOUSING OIL SEAL

(a) Using SST, remove the oil seal.

SST 09308–00010

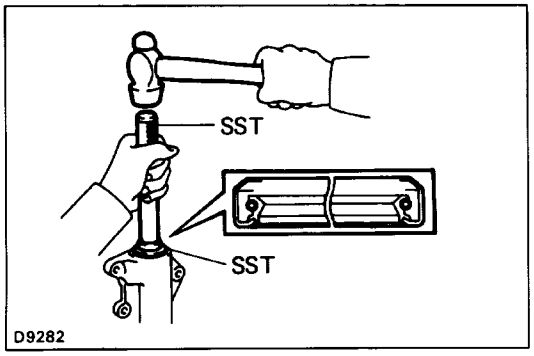

(b) Using SST, drive in a new oil seal.

SST 09550–10012 (09552–10010, 09558–10010)

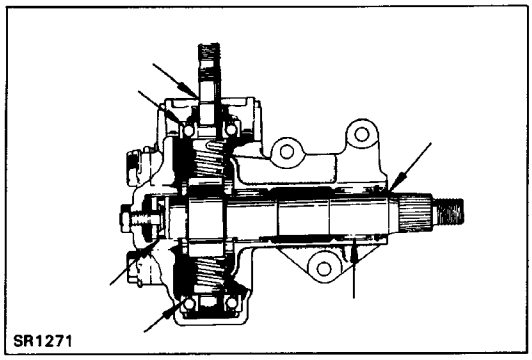

ASSEMBLY OF MANUAL GEAR HOUSING

(See page SR–27)

1. APPLY MP GREASE TO BUSHING, NEEDLE ROLLER BEARING AND OIL SEALS

2. INSTALL WORM SHAFT INTO GEAR HOUSING

Place the worm bearing on the shaft and install the shaft into the housing.

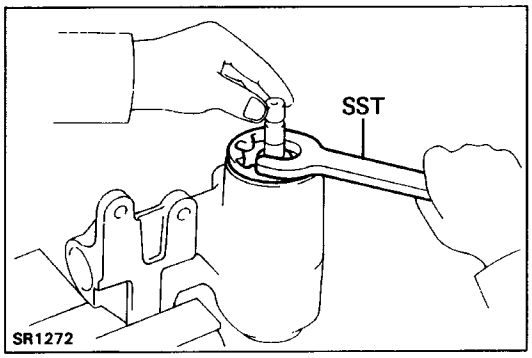

3. INSTALL AND ADJUST BEARING ADJUSTING SCREW

(a) Apply sealant to the adjusting screw.

Sealant: Part No. 08833–00080, THREE BOND 1344, LOCTITE 242 or equivalent

(b) Using SST, gradually tighten the adjusting screw until it is snug.

SST 09616–22010

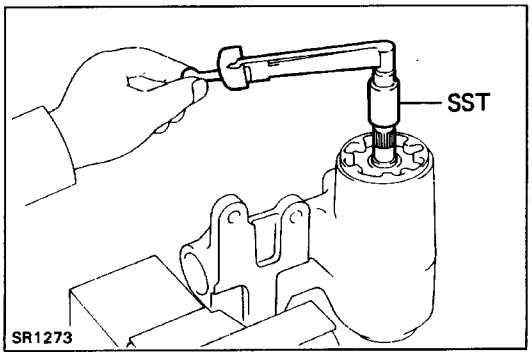

(c) Using a torque meter and SST, measure the bearing preload in both directions. Turn the adjusting screw until the preload is correct.

Preload (Starting):

0.3 – 0.5 N–m

(3.5 – 5.0 kgf–cm, 3.0 – 4.3 in.–lbf)

SST 09616–00010

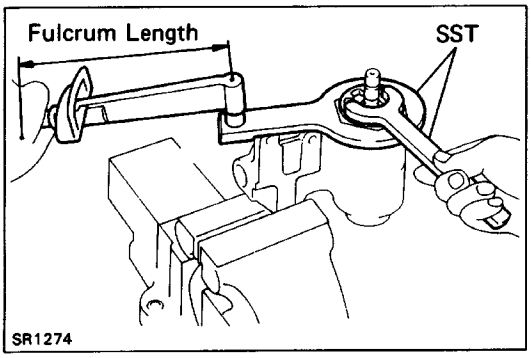

(d) Apply sealant to the lock nut.

Sealant: Part No. 08833–00080, THREE BOND 1344, LOCTITE 242 or equivalent

(e) Hold the adjusting screw in position with SST and tighten the lock nut with SST.

Torque: 109 N–m (1,110 kgf–cm, 80 ft–lbf)

SST 09616–22010, 09617–60010

HINT:

- Check that the bearing preload is still correct.
- Use a torque wrench with a fulcrum length of 425 mm (16.73 in.).

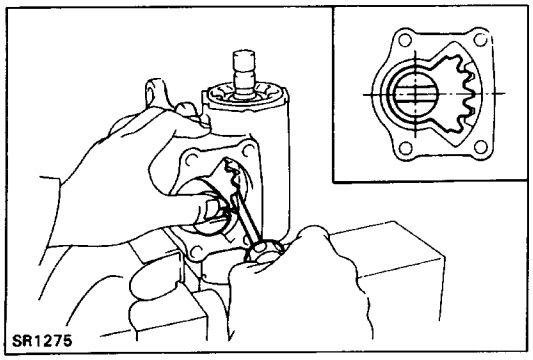

4. INSTALL SECTOR SHAFT

(a) Install the adjusting screw and thrust washer onto the sector shaft.

(b) Set the ball nut at the center of the worm shaft. Install the sector shaft into the gear housing so that the center teeth mesh together.

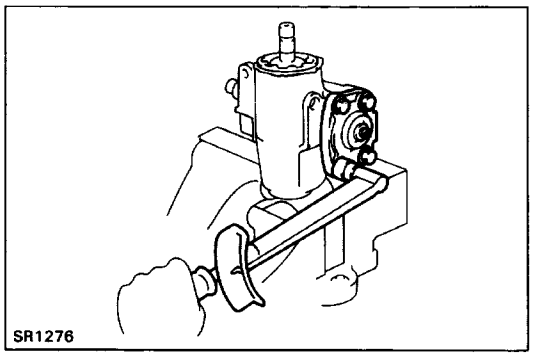

5. INSTALL END COVER

(a) Apply sealant to new gasket and end cover.
Sealant: Part No. 08833–00080, THREE BOND 1344, LOCTITE 242 or equivalent

(b) Install the end cover over the gasket.

(c) Loosen the adjusting screw as far as possible.

(d) Torque the four cover bolts.
Torque: 98 N–m (1,000 kgf–cm, 72 ft–lbf)

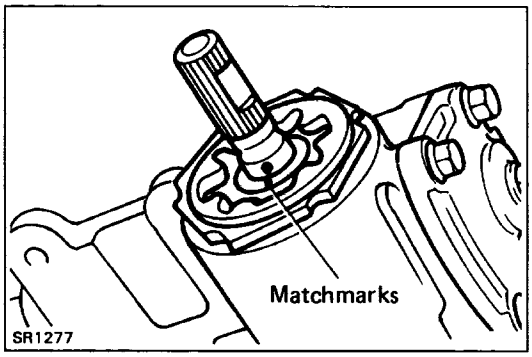

6. PLACE WORM SHAFT IN NEUTRAL POSITION

(a) Count the total shaft rotation and turn the shaft back half of that number.

(b) The worm shaft is now in neutral position.

(c) Place matchmarks on the worm shaft and housing to show neutral position.

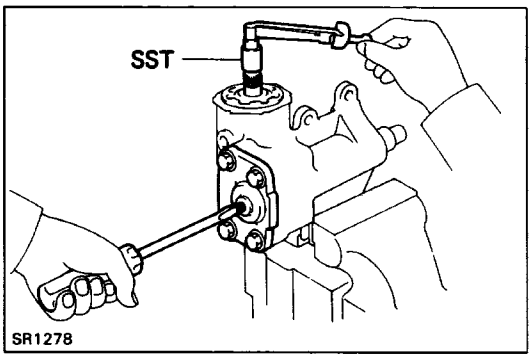

7. ADJUST TOTAL PRELOAD

Using a torque meter and SST, turn the adjusting screw while measuring the preload until the preload is correct.
HINT: Be sure that the worm shaft is in neutral position.
Preload (Starting):
0.8 – 1.1 N–m
(8.0 – 11.0 kgf–cm, 6.9 – 9.5 in. AM)
SST 09616–00010

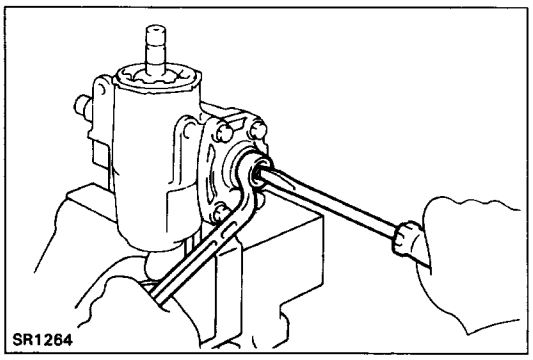

8. TIGHTEN ADJUSTING SCREW LOCK NUT

(a) Apply sealant to the lock nut.
Sealant: Part No. 08833–00080, THREE BOND 1344, LOCTITE 242 or equivalent

(b) Hold the screw with a screwdriver while tightening the lock nut.

(c) Torque the lock nut.
Torque: 44 N–m (450 kgf–cm, 33 ft–lbf)
HINT: Check that the preload is still correct.

9. MEASURE SECTOR SHAFT BACKLASH

(a) Align the alignment marks on the sector shaft with the pitman arm.

(b) Check that the sector shaft has no backlash within 100 degrees of the left and right side from neutral position.

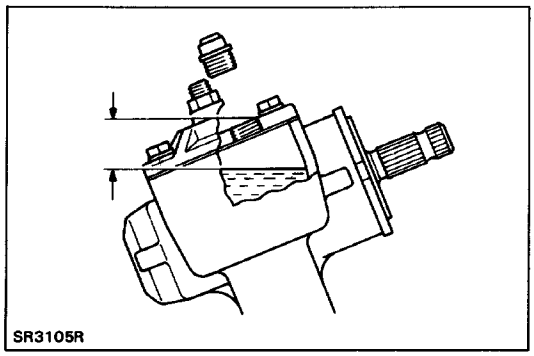

10. REPLENISH WITH GEAR OIL

Oil type: API GL–4, SAE 90

Capacity: 400 cc (24.4 cu in.)

Oil level: (at installation)

14 – 17 mm (0.55 – 0.67 in.) from top

11. INSTALL BLEEDER PLUG

Torque: 20 N–m (200 kgf–cm, 14 ft–lbf)

POWER STEERING

Description

Two types of power steering are the standard type and the PPS (progressive power steering) type. Both these types have a recirculating ball system and rotary type hydraulic control valve.

PPS TYPE

Vehicle speed is detected by a speed sensor and fluid pressure acting on the piston is varied accordingly. When the vehicle is stopped or when moving at low speed, fluid pressure is increased to lighten the force required for steering. At high speed, pressure is reduced to lessen the amount of assist and provide appropriate steering wheel response.

Standard Type

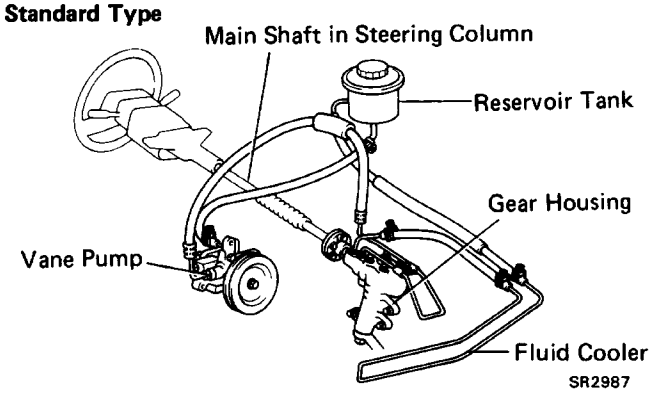

SR2987

PPS (Progressive Power Steering) Type

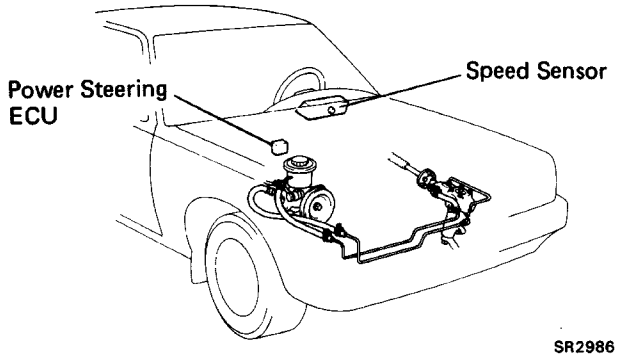

SR2986

PRINCIPLES OF POWER STEERING

Power steering is one type of hydraulic device for utilizing engine power to reduce steering effort. Consequently, the engine is used to drive a pump to develop fluid pressure, and this pressure acts on a piston within the gear box so that the piston assists the sector shaft effort. The amount of this assistance depends on the extent of pressure acting on the piston. Therefore, if more steering force is required, the pressure must be raised. The variation in the fluid pressure is accomplished by a control valve which is linked to the intermediate shaft and the steering main shaft.

NEUTRAL (STRAIGHT–AHEAD) POSITION

Fluid from the pump is sent to the control valve. If the control valve is in the neutral position, all the fluid will flow through the control valve into the relief port and back to the pump. At this time, hardly any pressure is created and because the pressure on the power piston is equal on both sides, the piston will not move in either direction.

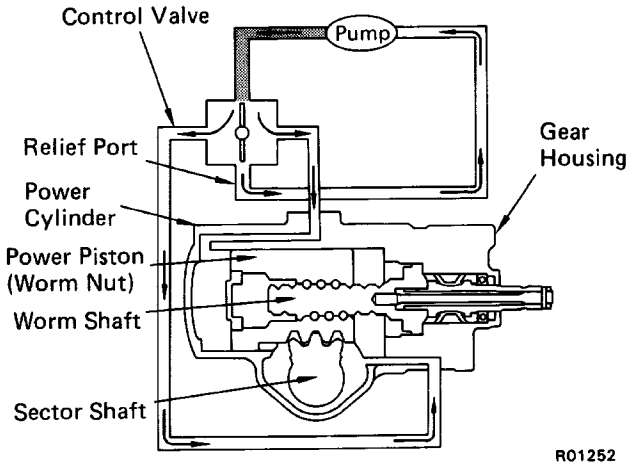

R01252

WHEN TURNING

When the steering main shaft is turned in either direction, the control valve also moves, closing one of the fluid passages. The other passage then opens wider, causing a change in fluid flow volume and, at the same time, pressure is created. Consequently, a pressure difference occurs between both sides of the piston and the piston moves in the direction of the lower pressure so that the fluid in the cylinder is forced back to the pump through the control valve.

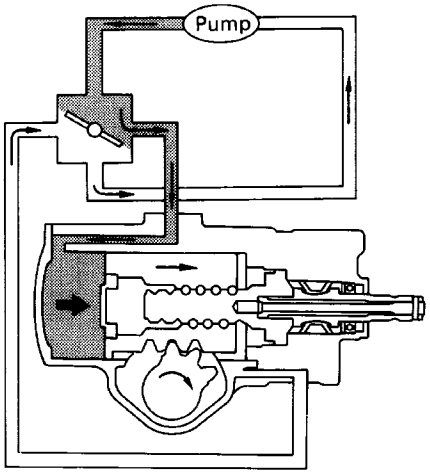

R01253

SERVICE HINT

Troubles with the power steering system are usu–ally concerned with hard steering due to the fact that there is no assist. In such cases, before at–tempting to make repairs, it is necessary to deter–mine whether the trouble lies with the pump or with the gear housing. To do this, an on–vehicle inspection can be made by using a pressure gauge.

ON–VEHICLE INSPECTION

Power steering is a hydraulic device and problems are normally due to insufficient fluid pressure act–ing on the piston. This could be caused by either the pump not producing the specified fluid pres–sure or the control valve in the gear housing not functioning properly so that the proper fluid pres–sure can not be obtained.

If the fault lies with the pump, the same symp–toms will generally occur whether the steering wheel is turned fully to the right or left. On the other hand, if the fault lies with the control valve, there will generally be a difference between the amount of assist when the steering wheel is turned to the left and right, causing harder steer–ing. However, if the piston seal of the power cyl–inder is worn, there will be a loss of fluid pressure whether the steering wheel is turned to the right or left and the symptoms will be the same for both.

Before performing an on–vehicle inspection, a check must first be made to confirm that the power steering system is completely free of any air. If there is any air in the system, the volume of this air will change when the fluid pressure is raised, causing a fluctuation in the fluid pressure so that the power steering will not function prop–erly. To determine if there is any air in the system, check to see if there is a change of fluid level in the reservoir tank when the steering wheel is turned fully to the right or left.

For example, if there is air in the system, it will be compressed to a smaller volume when the steer–ing wheel is turned, causing a considerable drop in the fluid level. If the system is free of air, there will be very little change in the level even when the fluid pressure is raised. This is because the fluid, being a liquid, does not change volume when compressed. The little change in the fluid level is due to expansion of the hoses between the pump and gear housing when pressure rises.

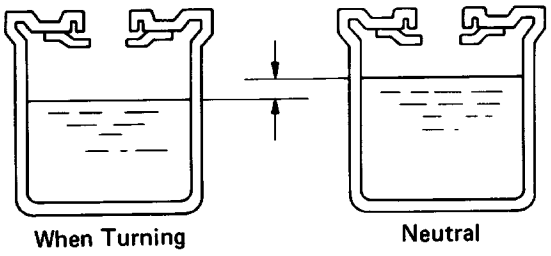

SR2392 SR2393

Also, air in the system will sometimes result in an abnormal noise occuring from the pump or gear housing when the steering wheel is fully turned in either direction.

This on–vehicle inspection must be performed ev–ery time to ensure that the power steering system is working properly after overhauling or repairing the pump or gear housing.

VANE PUMP

The main component parts of the vane pump, such as the cam ring, rotor, vanes and flow con–trol valve are high precision parts and must be handled carefully. Also, because this pump pro–duces a very high fluid pressure, O–rings are used for sealing each part. When reassembling the pump, always use new O–rings.

In the flow control valve, there is a relief valve which controls the maximum pressure of the pump. The amount of this maximum pressure is very important; if it is too low, there will be insuf–ficient power steering assist and if too high, it will have an abverse effect on the pressure hoses, oil seals, etc.. If the maximum pressure is either too high or too low due to a faulty relief valve, do not disassemble or adjust the relief valve, but replace the flow control valve as an assembly.

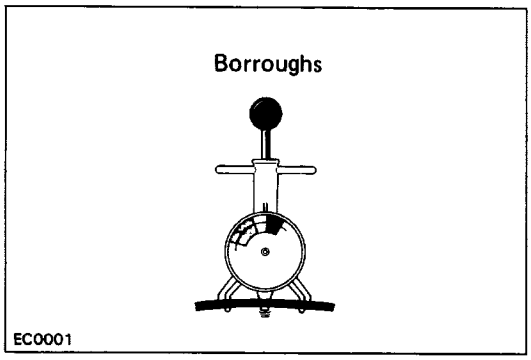

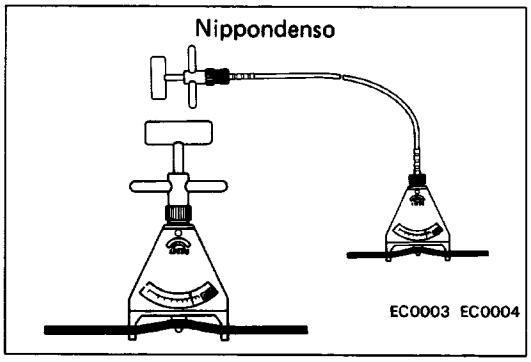

On–Vehicle Inspection

CHECK DRIVE BELT TENSION

Using a belt tension gauge, check the drive belt tension.

Belt tension gauge:

Nippondenso BTG–20 (95506–00020) or
Borroughs No. BT–33–73F

Drive belt tension:

New belt	**441 – 667 N–m (45 – 68 kgf, 100 – 150 lbf)**
Used belt	**265 – 441 N–m (27 – 45 kgf, 60 – 100 lbf)**

HINT:

- ”New belt” refers to a belt which has been less than 5 minutes on a running engine.
- ”Used belt” refers to a belt which has been used on a running engine for 5 minutes or more.

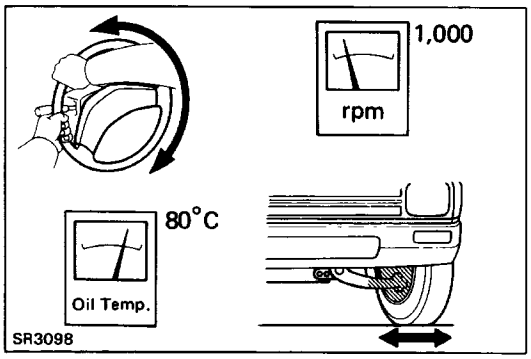

FLUID LEVEL CHECK

1. KEEP VEHICLE LEVEL

2. BOOST FLUID TEMPERATURE

With the engine idling at 1,000 rpm or less, turn the steering wheel from lock to lock several times to boost fluid temperature.

Fluid temperature: 80°C (176°F)

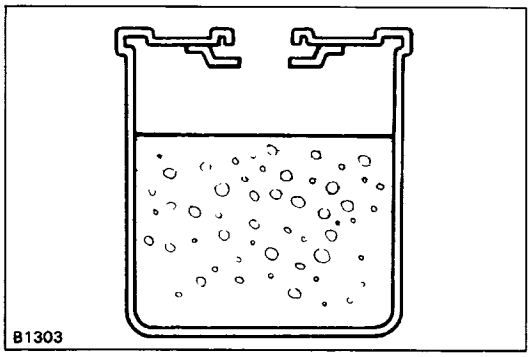

3. CHECK FOAMING OR EMULSIFICATION

HINT: Foaming and emulsification indicate either the existence of air in the system or that the fluid level is too low.

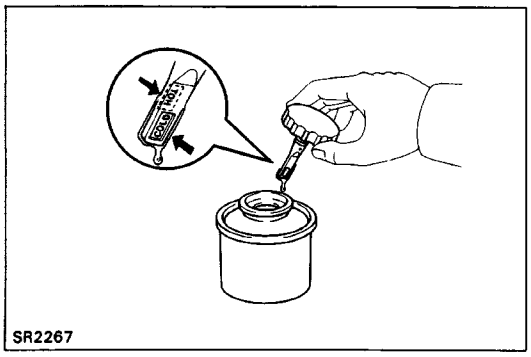

4. CHECK FLUID LEVEL IN RESERVOIR

Check the fluid level and add fluid if necessary.

Fluid: ATF DEXRON©II

HINT: Check that the fluid level is within the HOT LEVEL of the dipstick. If the fluid is cold, check that it is within the COLD LEVEL of the dipstick.

REPLACEMENT OF POWER STEERING FLUID

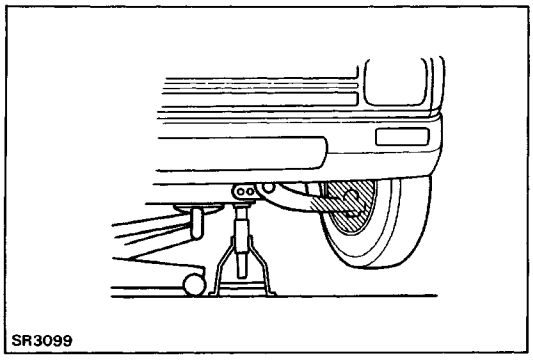

1. JACK UP FRONT OF VEHICLE AND SUPPORT IT WITH STANDS

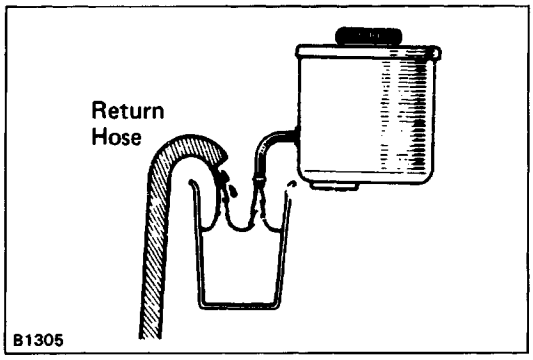

2. REMOVE FLUID RETURN HOSE FROM RESERVOIR TANK AND DRAIN FLUID INTO CONTAINER

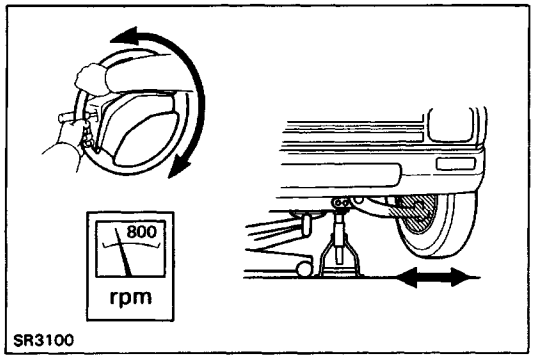

3. WITH ENGINE IDLING, TURN STEERING WHEEL FROM LOCK TO LOCK WHILE DRAINING FLUID

4. STOP ENGINE

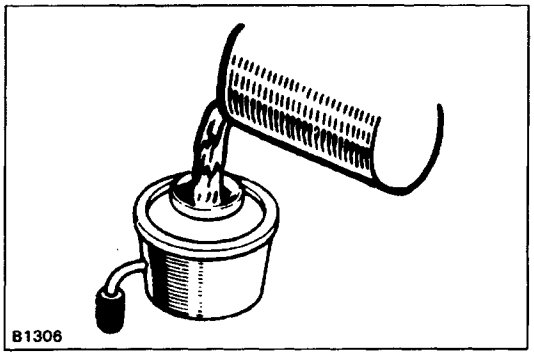

5. FILL RESERVOIR TANK WITH FRESH FLUID

Fluid : ATF DEXRON© II

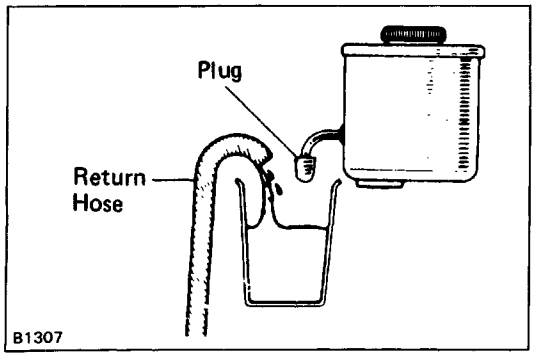

6. START ENGINE AND RUN IT AT 1,000 RPM

After 1 or 2 seconds, fluid will begin to discharge from the return hose. Stop the engine immediately at this time.

NOTICE: Take care that some fluid remains left in the reservoir tank.

7. REPEAT STEPS 5 AND 6 FOUR OR FIVE TIMES UNTIL THERE IS NO MORE AIR IN FLUID

8. CONNECT RETURN HOSE TO RESERVOIR TANK

9. BLEED POWER STEERING SYSTEM

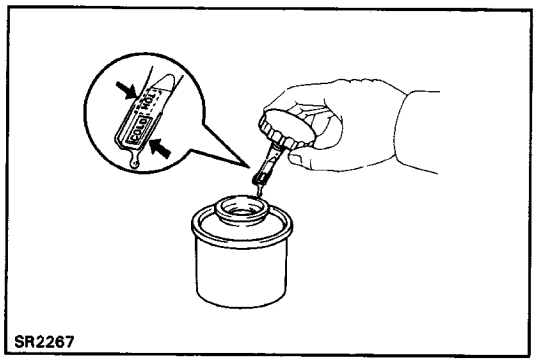

BLEEDING OF POWER STEERING SYSTEM

NOTICE: The air bleeding method for vehicles equipped with the rear–wheel anti–lock brake system is different to the former method. For details, see page BR–95.

1. CHECK FLUID LEVEL IN RESERVOIR TANK

Check the fluid level and add fluid if necessary.

Fluid: ATF DEXRON©II

HINT: Check that the fluid level is within the HOT LEVEL of the dipstick. If the fluid is cold, check that it is within the COLD LEVEL of the dipstick.

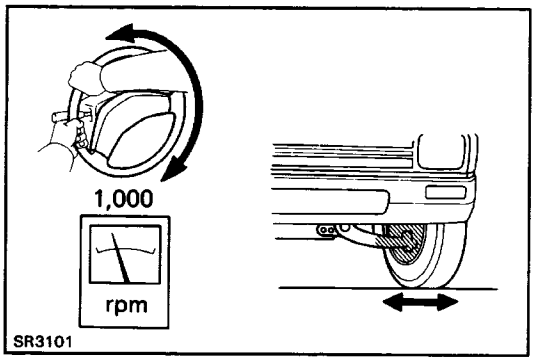

2. START ENGINE AND TURN STEERING WHEEL FROM LOCK TO LOCK THREE OR FOUR TIMES

Run the engine at 1,000 rpm or less.

3. STOP ENGINE AND CONNECT VINYL TUBE TO BLEEDER PLUG

4. START ENGINE AND TURN STEERING WHEEL FROM LOCK TO LOCK TWO OR THREE TIMES

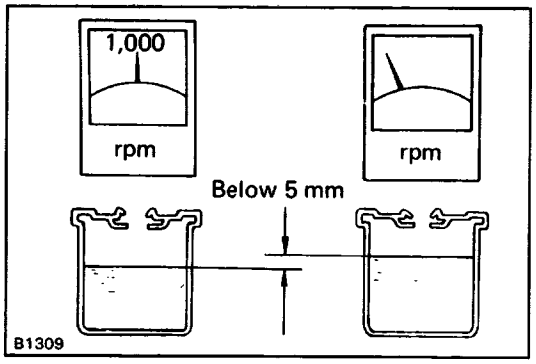

5. CHECK THAT FLUID IN RESERVOIR IS NOT FOAMY OR CLOUDY AND DOES NOT RISE OVER MAXIMUM WHEN ENGINE IS STOPPED

Measure the fluid level with the engine running. Stop the engine and measure the fluid level.

Maximum rise: 5 mm (0.20 in.)

If a problem is found, repeat steps 7 and 8 on page SR–40.

Repair the PS if the problem persists.

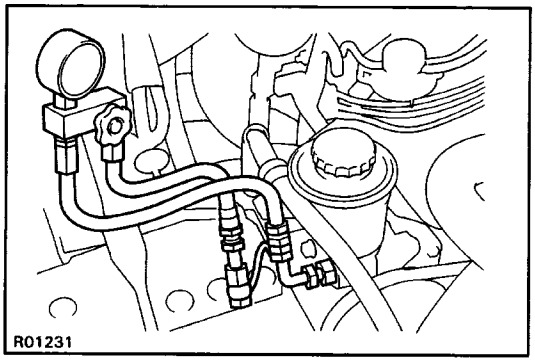

OIL PRESSURE CHECK

1. CONNECT PRESSURE GAUGE

(a) Disconnect the pressure line from the PS pump.
SST 09631–22020 (RN Series4WD)

(b) Connect the valve side of the pressure gauge to the pressure line, and the gauge side to the PS pump.

(c) Bleed the system. Start the engine and turn the steering wheel from lock to lock two or three times.

(d) Check that the fluid level is correct.

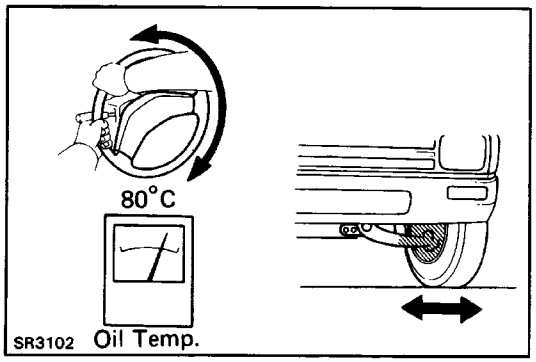

2. CHECK THAT FLUID TEMPERATURE IS AT LEAST 80°C (176°F)

3. START ENGINE AND RUN IT AT IDLE

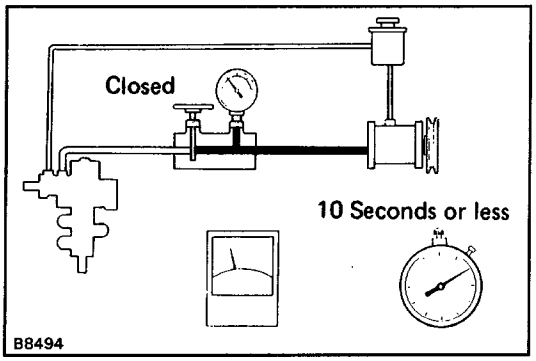

4. CHECK FLUID PRESSURE READING WITH VALVE CLOSED

Close the pressure gauge valve and observe the reading on the gauge.

Minimum pressure:

3VZ Engine 7,845 kPa (80 kg f/cm^2, 1,138 psi)

Ex. 3VZ Engine 7,355 kPa (75 kgf/cm^2, 1,067 psi)

NOTICE:

- **Do not keep the valve closed for more than 10 sec–onds.**
- **Do not let the fluid temperature become too high.**

If pressure is low, repair or replace the PS pump.

5. OPEN VALVE FULLY

6. CHECK AND RECORD PRESSURE READING AT 1,000 RPM

7. CHECK AND RECORD PRESSURE READING AT 3,000 RPM

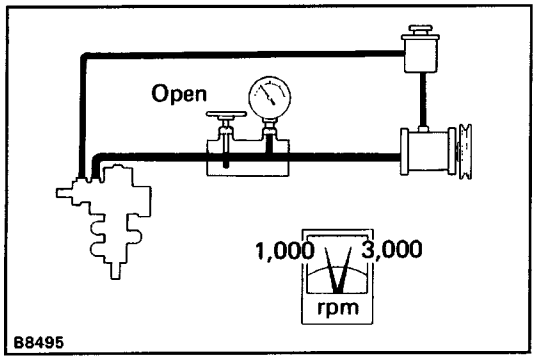

Check that there is 490 kPa (5 kgf/cm^2, 71 psi) or less difference in pressure between the 1,000 rpm and 3,000 rpm checks.

If the difference is excessive, repair or replace the flow control valve of the PS pump.

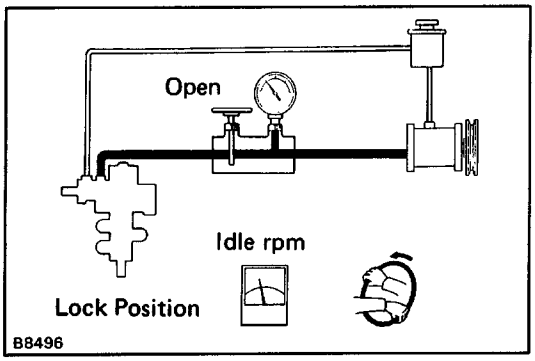

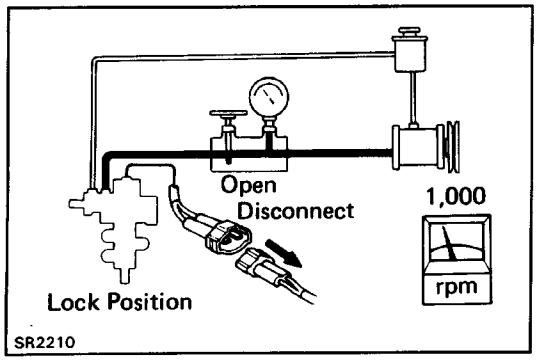

8. CHECK PRESSURE READING WITH STEERING WHEEL TURNED TO FULL LOCK

[Standard type power steering]

Be sure the pressure gauge valve is fully opened and the engine idling.

Minimum pressure:

3VZ Engine	**7,845 kPa (80 kg f/cm^2, 1,138 psi)**
Ex. 3VZ Engine	**7,355 kPa (75 kgf/cm^2, 1,067 psi)**

If pressure is low, the gear housing has an internal leak and must be repaired or replaced.

[Progressive power steering]

(a) Turn the steering wheel to full lock position.

(b) Disconnect the solenoid connector.

(c) Be sure the pressure gauge valve is fully opened and the engine is running at 1,000 rpm.

Minimum pressure:

3VZ Engine	**7,845 kPa (80 kgf/cm^2, 1,138 psi)**
Ex. 3VZ Engine	**7,355 kPa (75 kgf/cm^2, 1,067 psi)**

If pressure is low, the gear housing has an internal leak or the solenoid is faulty.

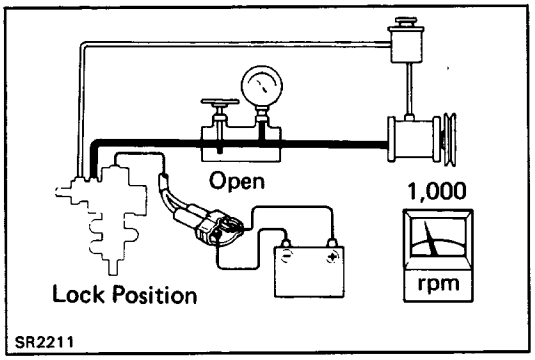

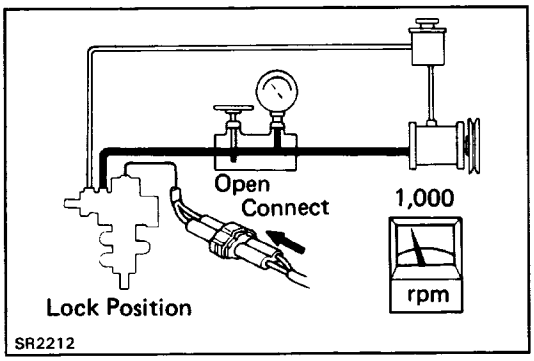

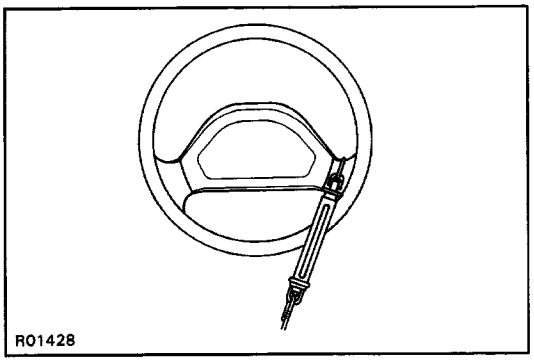

(d) Apply battery positive voltage to the solenoid.

NOTICE:

- **Do not apply voltage more than 30 seconds to avoid burning out the solenoid.**
- **If repeating this step, wait until the solenoid cools down enough that it can be touched by hand.**

(e) Check the oil pressure.

(Reference)

Maximum pressure: Approx. 3,923 kPa (40 kgf/cm^2, 569 psi.)

If pressure is high, check the solenoid.

(f) Connect the solenoid connector and check the oil pressure.

Minimum pressure:

3VZ Engine 7,845 kPa (80 kgf/cm^2, 1,138 psi)

Ex. 3VZ Engine 7,355 kPa (75 kgf/cm^2, 1,067 psi)

If pressure is low, the progressive power steering system is faulty.

9. MEASURE STEERING EFFORT

[Standard type power steering]

(a) Center the steering wheel and run the engine at idle.

(b) Using a spring scale, measure the steering effort in both directions.

Maximum steering effort: 39 N (4 kgf, 8.8 lbf)

If steering effort is excessive, repair the power steering unit.

HINT: Be sure to consider the tire type, pressure and contact surface before making your diagnosis.

[Progressive power steering]

(a) Center the steering wheel and run the engine at idle.

(b) Using a spring scale, measure the steering effort in both directions.

Maximum steering effort: 29 N (3 kgf, 6.6 lbf)

If steering effort is excessive, repair the power steering unit.

(c) Apply battery positive voltage to the solenoid.

NOTICE:

- **Do not apply voltage more than 30 seconds to avoid burning out the solenoid.**
- **If repeating this step, wait until the solenoid cools down enough that it can be touched by hand.**

(d) Check that the steering effort is heavier than it was before battery positive voltage was applied to the solenoid.

(Reference)

Maximum steering effort: 118 N (12 kgf, 26 lbf)

(e) If steering effort is not heavier, check the solenoid.

HINT: Be sure to consider tire type, pressure and con–tact surface before making your diagnosis.

Power Steering Pump

REMOVAL AND INSTALLATION OF POWER STEERING PUMP

Remove and install the parts as shown.

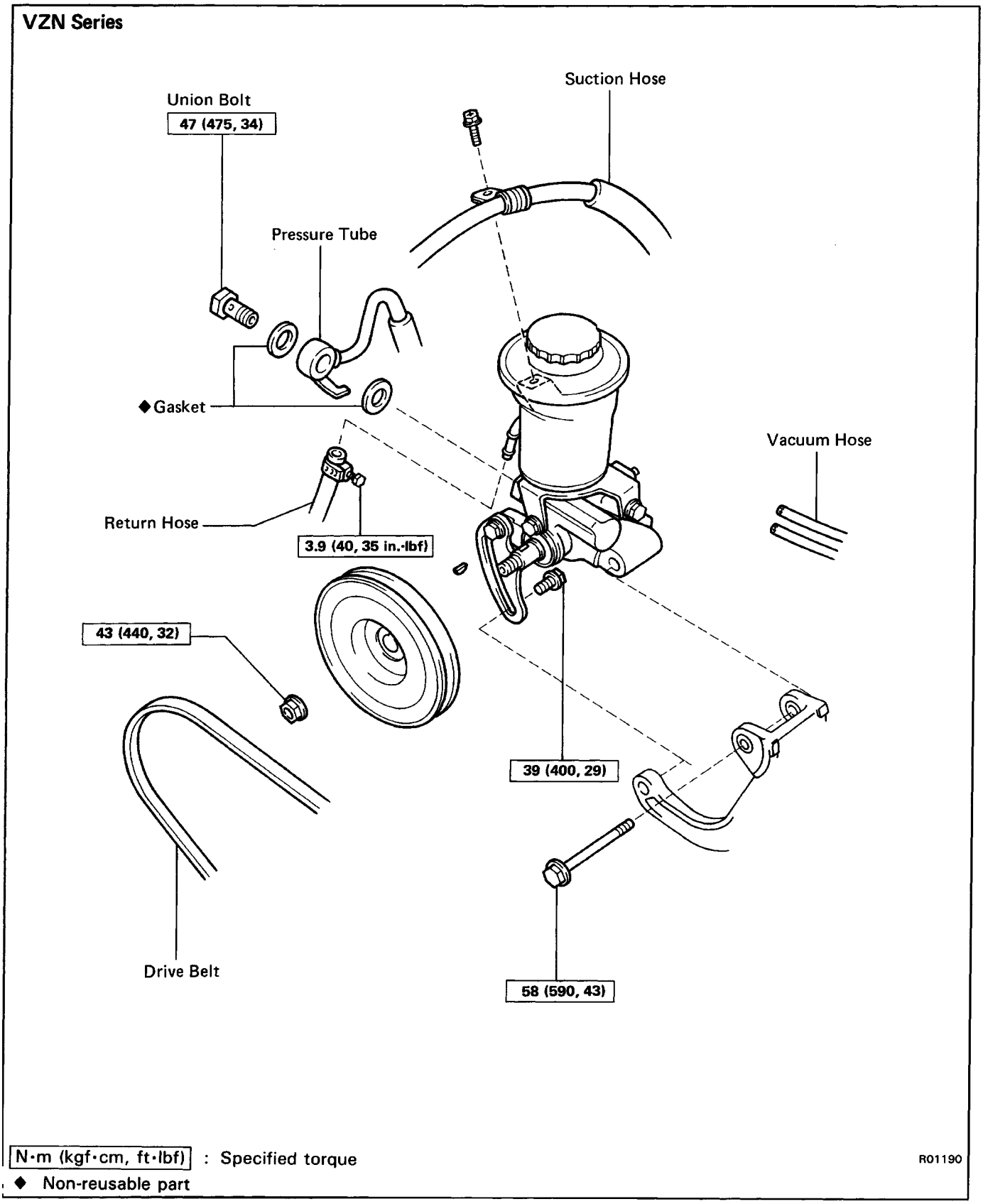

RN Series

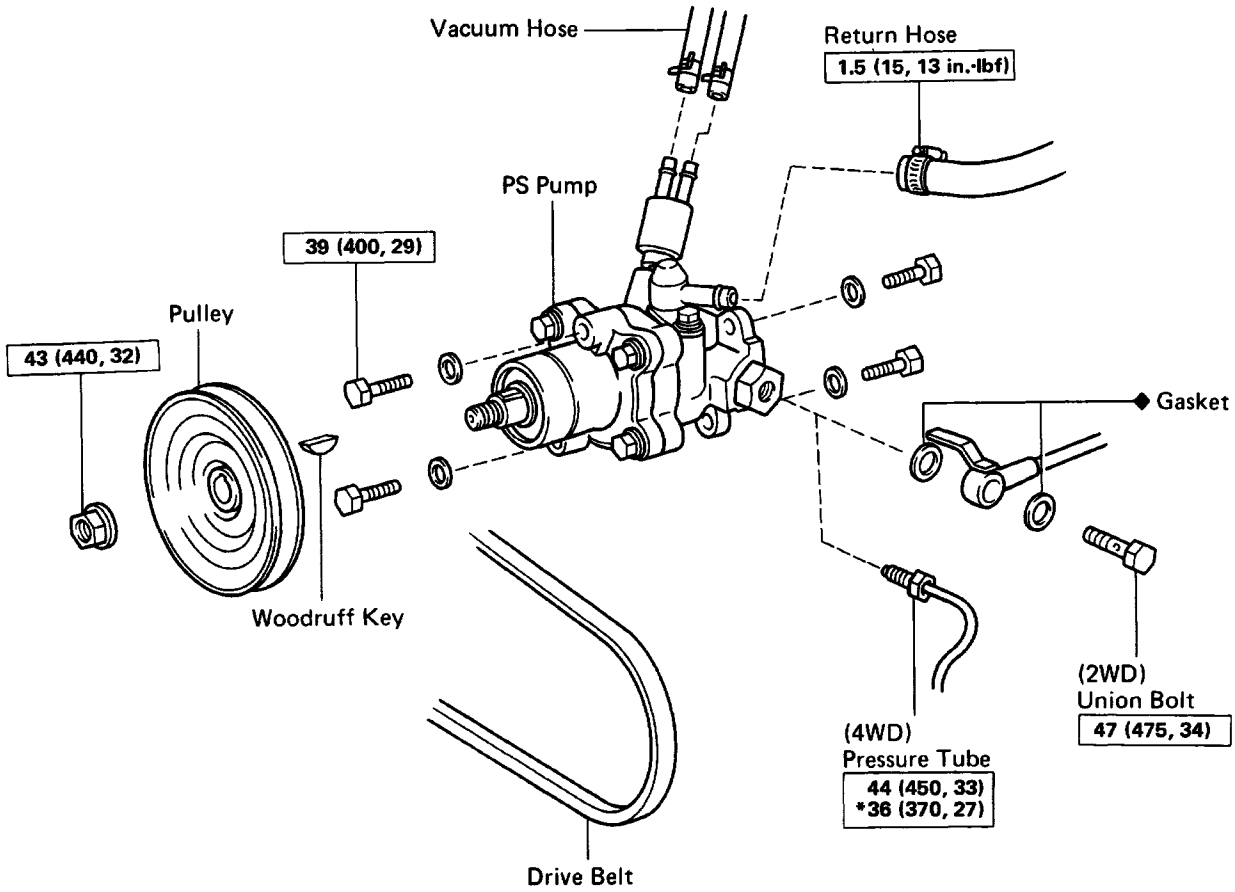

N·m (kgf·cm, ft·lbf) : Specified torque
◆ Non-reusable part

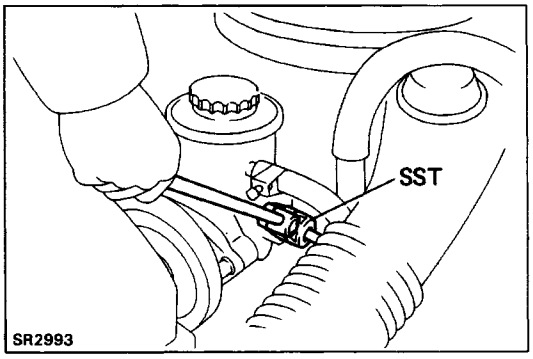

(MAIN POINTS OF REMOVAL AND INSTALLATION)

1. (RN Series/4WD)

DISCONNECT AND CONNECT PRESSURE TUBE

Using SST, disconnect and connect the pressure tube from/to the PS pump.

SST 09631–22020

Torque: 36 N–m (370 kgf–cm, 27 ft–lbf)

HINT: Use a torque wrench with a fulcrum length of 300 mm (11.81 in.).

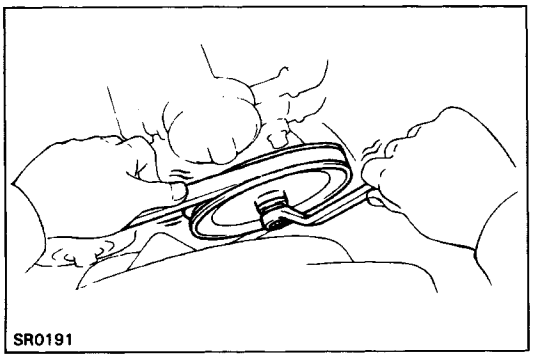

2. LOOSEN PULLEY NUT

Push on the drive belt with your hand to hold the pulley in place and loosen the pulley nut.

3. ADJUST DRIVE BELT TENSION AFTER INSTALLING PS PUMP

(See page SR–40)

COMPONENTS (VZN series)

Pressure Port Union
69 (700, 51)
41 (420, 30)
Reservoir Tank
◆O-Ring
Flow Control Valve
Spring
13 (130, 9)
41 (420, 30)
Snap Ring
◆O-Ring
Air Control Valve
36 (370, 27)
Front Housing
◆
Wave Washer
Rear Plate
41 (420, 30)
Cam Ring
Rotor
Adjusting Stay
Front Plate
◆Oil Seal
Rear Housing
◆O-Ring
Pump Shaft
◆O-Ring
Vane Plate
Straight Pin
Snap Ring
SR2480

N·m (kgf·cm, ft·lbf) : Specified torque
◆ Non-reusable part

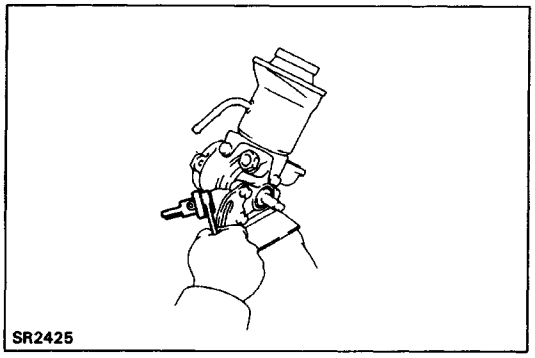
SR2425

DISASSEMBLY OF POWER STEERING PUMP

1. CLAMP PS PUMP IN VISE

NOTICE: Do not tighten the vise too tight.

2. REMOVE AIR CONTROL VALVE

(a) Remove the air control valve.
(b) Remove the union seat.

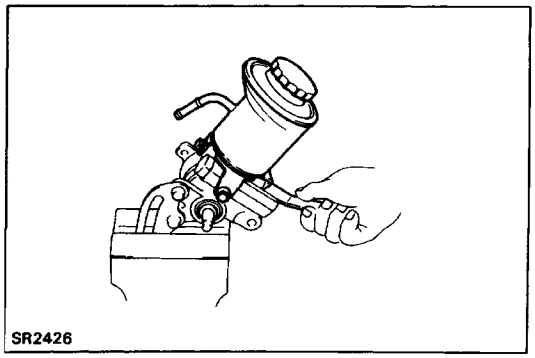
SR2426

3. REMOVE RESERVOIR TANK

(a) Remove three bolts and the reservoir tank.
(b) Remove the 0–ring from the reservoir tank.

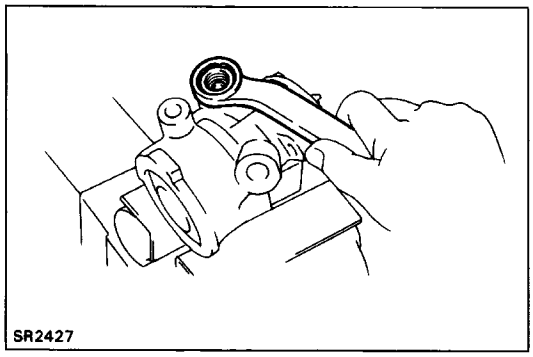

4. REMOVE PRESSURE PORT UNION AND FLOW CONTROL VALVE

(a) Remove the pressure port union.
(b) Remove the O–ring from the pressure port union.
(c) Remove the flow control valve and spring.

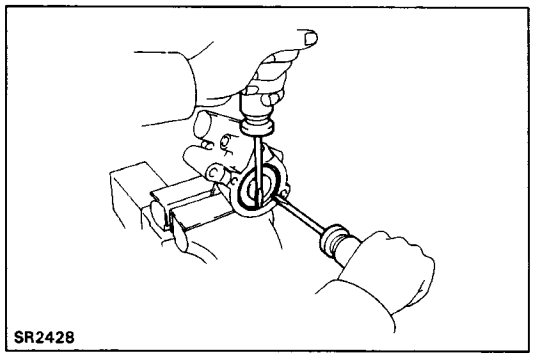

5. REMOVE REAR HOUSING

(a) Using two screwdrivers, remove the snap ring.

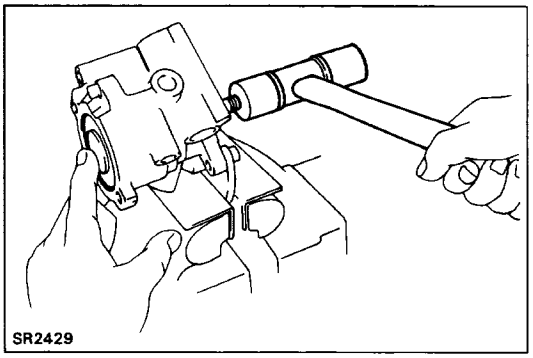

(b) Using a plastic hammer, tap out the rear housing and wave washer.
(c) Remove the O–ring from the rear housing.

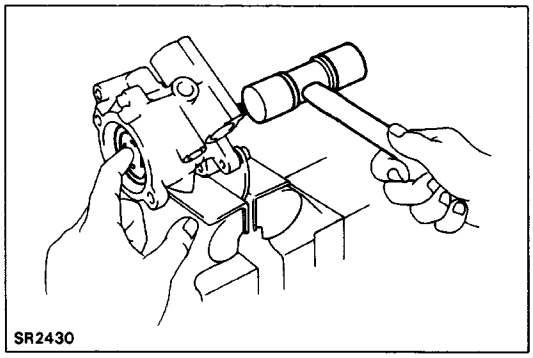

6. REMOVE REAR PLATE

(a) Using a plastic hammer, tap the shaft end and re–move the rear plate.
(b) Remove the 0–ring from the rear plate.

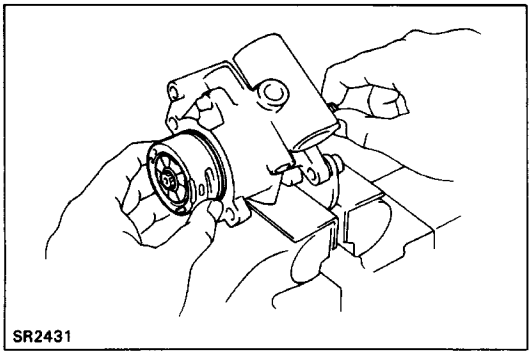

7. REMOVE PUMP SHAFT, CAM RING AND VANE PLATES

(a) Remove the pump shaft with the cam ring and vane plates from the front housing.
(b) Remove the cam ring and ten vane plates from the pump shaft.
(c) Remove the longer straight pin from the front hous–ing.

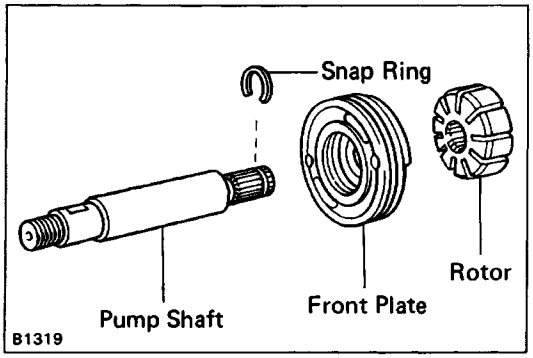

8. REMOVE ROTOR AND FRONT PLATE

(a) Using a screwdriver, remove the snap ring.
(b) Remove the rotor and front plate from the pump shaft.
(c) Remove the two 0–rings from the front plate.
(d) Remove the straight pin from the front plate. .

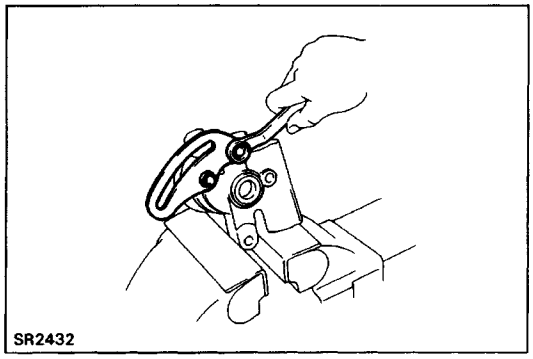

9. REMOVE ADJUSTING STAY

Remove the two bolts and adjusting stay.

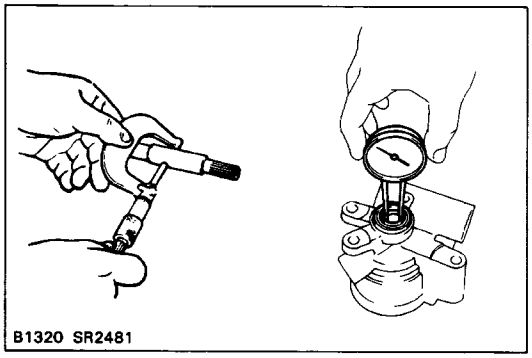

INSPECTION OF POWER STEERING PUMP

1. CHECK OIL CLEARANCE OF SHAFT AND BUSHING

Using a micrometer and calipers, check the oil clearance.

Standard clearance: 0.01–0.03 mm (0.0004 – 0.0012 in.)

Maximum clearance: 0.07 mm (0.0028 in.)

If more than maximum, replace the entire PS pump.

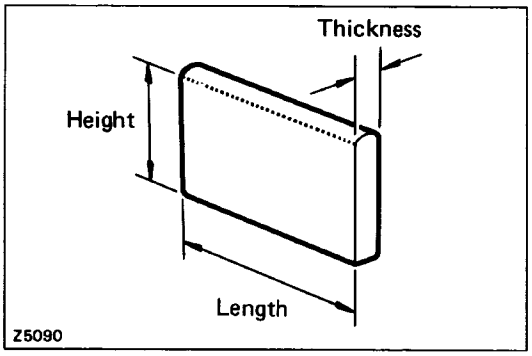

2. INSPECT ROTOR AND VANE PLATES

(a) Using a micrometer, measure the height, thickness and length of the vane plate.

Minimum height: 8.1 mm (0.319 in.)

Minimum thickness: 1.797 mm (0.0707 in.)

Minimum length: 14.988 mm (0.5901 in.)

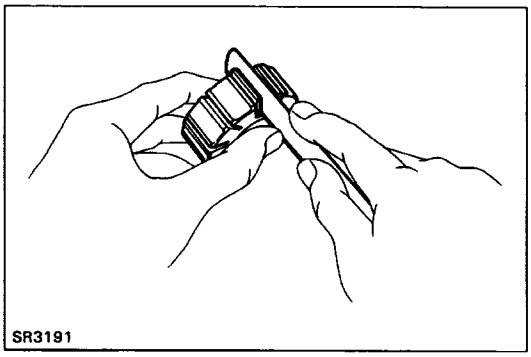

(b) Using a feeler gauge, measure the clearance between the rotor groove and vane plate.

Maximum clearance: 0.03 mm (0.0012 in.)

If more than maximum, replace the vane plate and/or rotor with one having the same mark stamped on the cam ring.

Inscribed mark: 1, 2, 3, 4 or None

HINT: There are five vane lengths with the following rotor and cam ring marks:

Rotor and cam ring mark	Vane length mm (in.)
None	14.996 – 14.998 (0.59039 – 0.59047)
1	14.994 – 14.996 (0.59032 – 0.59039)
2	14.992 – 14.994 (0.59024 – 0.59032)
3	14.990 – 14.992 (0.59016 – 0.59024)
4	14.988 – 14.990 (0.59008 – 0.59016)

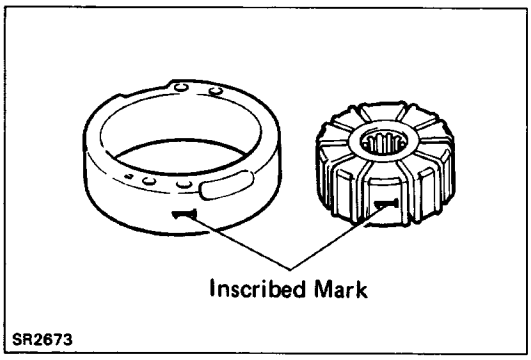

3. INSPECT FLOW CONTROL VALVE

(a) Coat the valve with power steering fluid and check that it falls smoothly into the valve hole by its own weight.

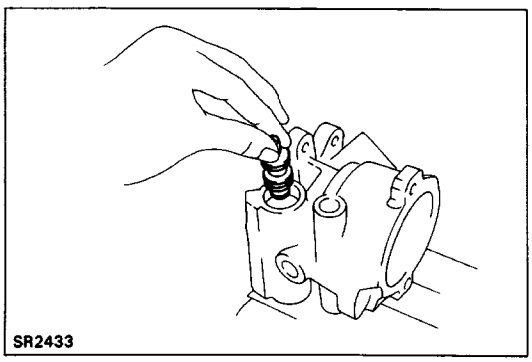

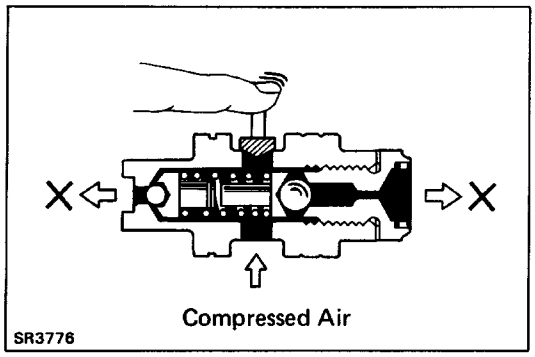

(b) Check the flow control valve for leakage.
Close one of the holes and apply compressed air [392 – 490 kPa (4 – 5 kgf/cm^2, 57 – 71 psi)] into the opposite side, and confirm that air does not come out from the end hole.

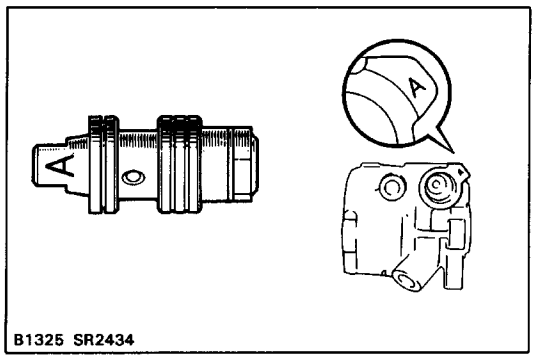

If necessary, replace the valve with one having the same letter as inscribed on the front housing.
Inscribed mark: A, B, C, D, E or F

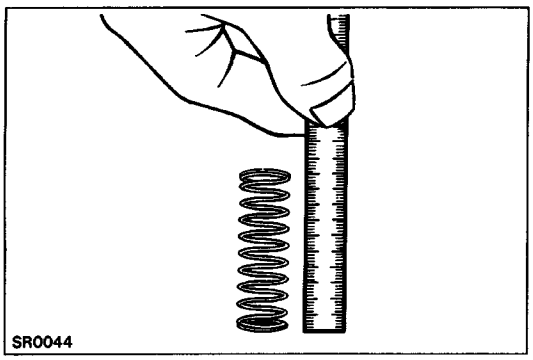

4. INSPECT FLOW CONTROL SPRING
Using a scale, measure the free length of the spring.
Spring length: 35–37 mm (1.38–1.46 in.)
If not within specification, replace the spring.

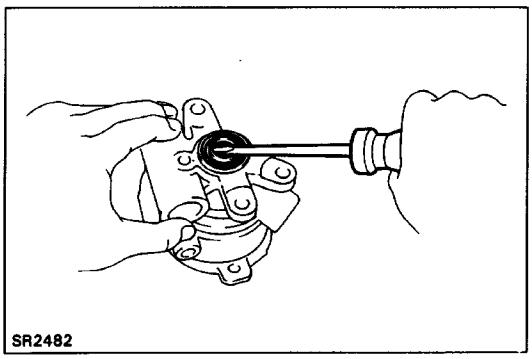

5. IF NECESSARY, REPLACE OIL SEAL
(a) Using a screwdriver, pry out the oil seal.

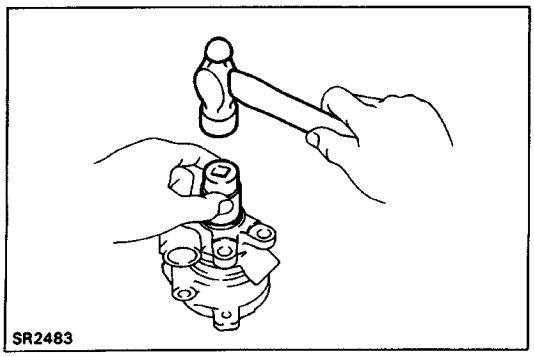

(b) Using a socket wrench and hammer, drive in a new oil seal.

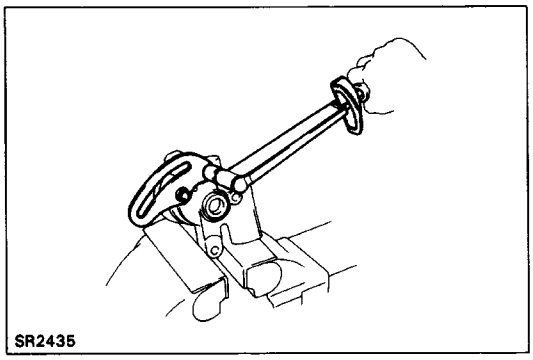

ASSEMBLY OF POWER STEERING PUMP

(See page SR–47)

1. COAT ALL SLIDING SURFACES WITH POWER STEERING FLUID BEFORE ASSEMBLY

2. INSTALL ADJUSTING STAY

Install the adjusting stay and torque the two bolts.

Torque: 41 N–m (420 kgf–cm, 30 ft–lbf)

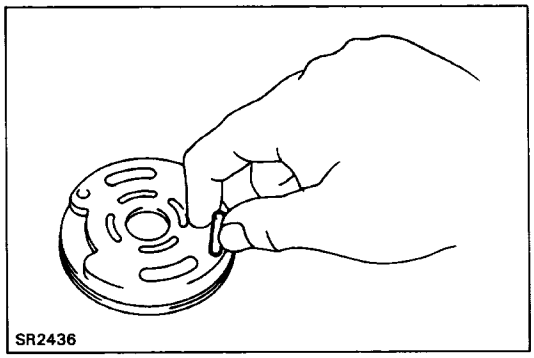

3. INSTALL FRONT PLATE AND ROTOR TO PUMP SHAFT

(a) Install the shorter straight pin to the front plate.

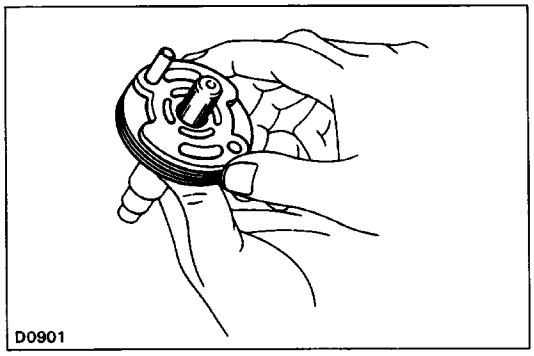

(b) Install two new O–rings to the front plate.

(c) Install the front plate to the pump shaft.

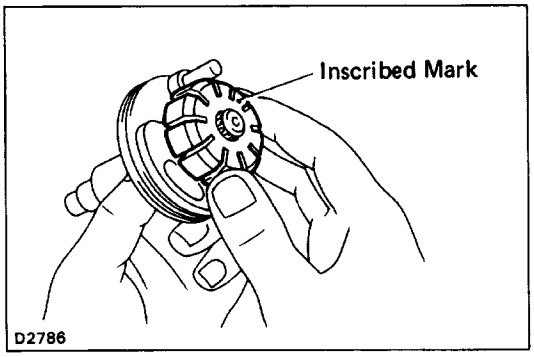

(d) Install the rotor to the pump shaft with the inscribed mark facing outward.

(e) Install the snap ring.

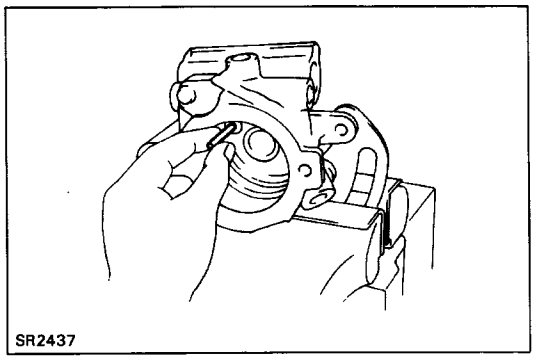

4. INSTALL PUMP SHAFT TO FRONT HOUSING

(a) Coat the oil seal lip with MP grease.

(b) Install the longer straight pin to the front housing.

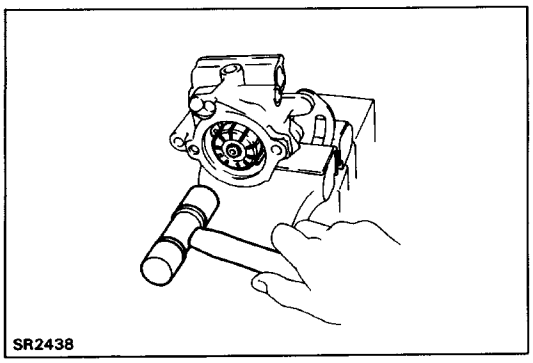

(c) Align the hole of the front plate and straight pin and tap in the pump shaft with a plastic hammer.
NOTICE: Be careful not to damage the oil seal and 0–rings.

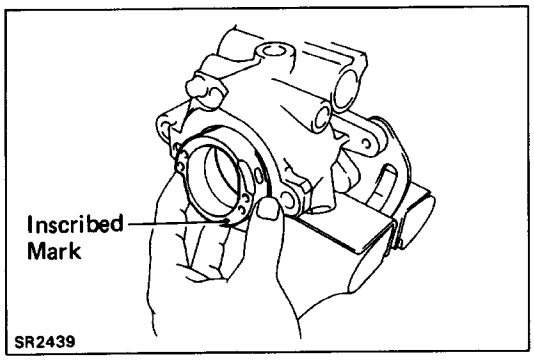

5. INSTALL CAM RING

Align the oval hole of the cam ring and longer straight pin, and insert the cam ring with the inscribed mark facing outward.

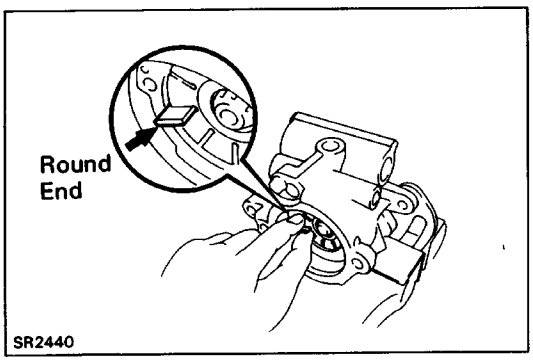

6. INSTALL VANE PLATES

Install the ten vane plates with the round end facing outward.

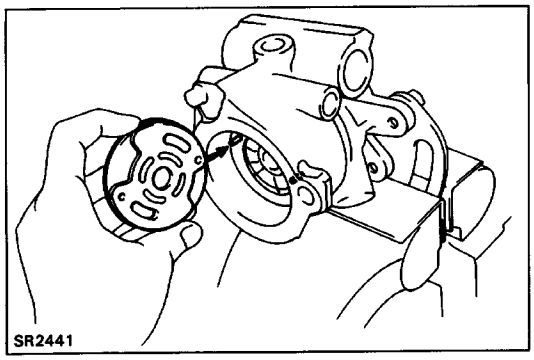

7. INSTALL REAR PLATE

(a) Install a new O–ring to the rear plate.
(b) Align the holes of the rear plate with the pins, and install the plate.

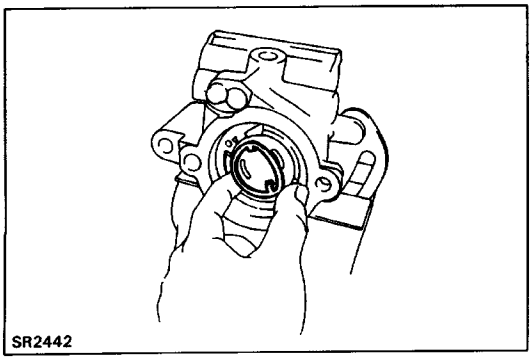

8. INSTALL REAR HOUSING

(a) Install the wave washer.
(b) Install a new 0–ring to the rear housing.
(c) Using a plastic hammer, tap in the rear housing.

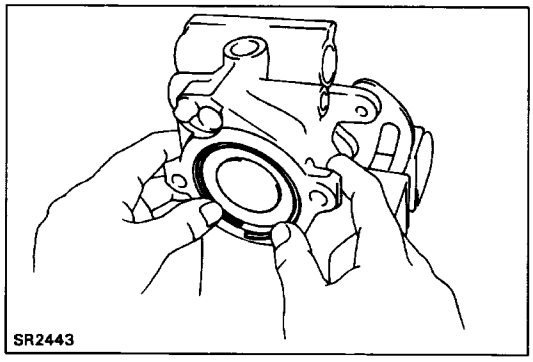

(d) Install the snap ring.

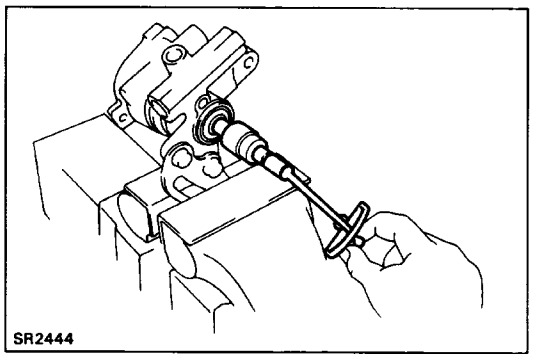

9. CHECK PUMP SHAFT PRELOAD

(a) Check that the shaft rotates smoothly without ab–normal noise.

(b) Temporarily install the pulley nut and check the ro–tating torque.

Rotating torque:

0 .3 N–m (2.8 kgf–cm, 2.4 in.–lbf) or less

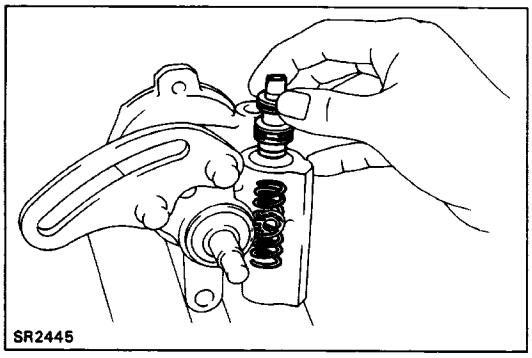

10. INSTALL SPRING, FLOW CONTROL VALVE AND PRESSURE PORT UNION

(a) Install the spring and the valve into the housing.

(b) Install a new 0–ring in the groove of the pressure port union.

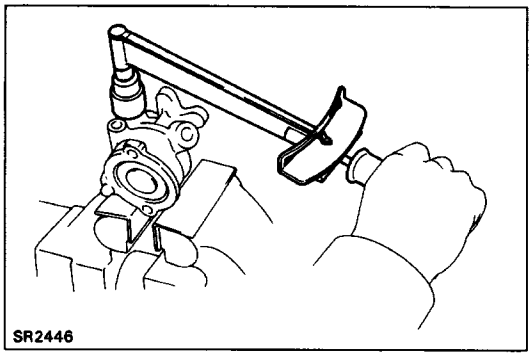

(c) Install and torque the pressure port union.

Torque: 69 N–m (700 kgf–cm, 51 ft–lbf)

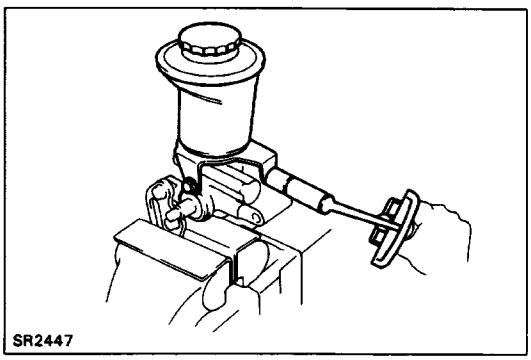

11. INSTALL RESERVOIR TANK

(a) Install a new O–ring to the reservoir tank.

(b) Install the reservoir tank to the housing and torque the three bolts.

Torque: 12 mm bolt 13 N–m (130 kgf–cm, 9 ft–lbf)

14 mm bolt 41 N–m (420 kgf–cm, 30 ft–lbf)

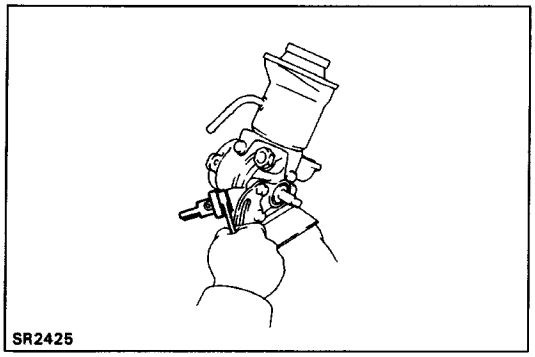

12. INSTALL AIR CONTROL VALVE

(a) Install a new union seat to the housing.

(b) Install and torque the air control valve.

Torque: 36 N–m (370 kgf–cm, 27 ft–lbf)

COMPONENTS (RN series)

Air Control Valve
36 (370, 27)
Suction Port Union
13 (130, 9)
◆O-Ring
Snap Ring
Flow Control Spring Seat
◆ O-Ring
◆ Union
Flow Control Valve
◆O-Ring
Cam Ring
Rotor
Spring
Spring
◆O-Ring
Rear Housing
69 (700, 51)
Pressure Port Union
Rear Plate
Snap Ring
◆O-Ring
◆ O-Ring
Straight Pin
Vane Plate
Front Housing
Snap Ring
Bearing
Rotor Shaft
46 (470, 34)
◆Oil Seal
SR3035

N·m (kgf·cm, ft·lbf) : Specified torque
◆ Non-reusable part

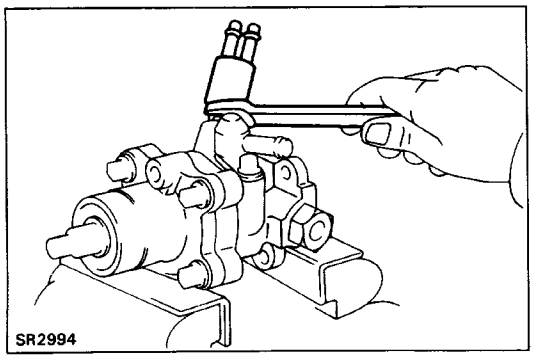

DISASSEMBLY OF POWER STEERING PUMP

1. CLAMP PS PUMP IN VISE

NOTICE: Do not tighten the vise too tight.

2. REMOVE AIR CONTROL VALVE

(a) Remove the air control valve.
(b) Remove the union seat.

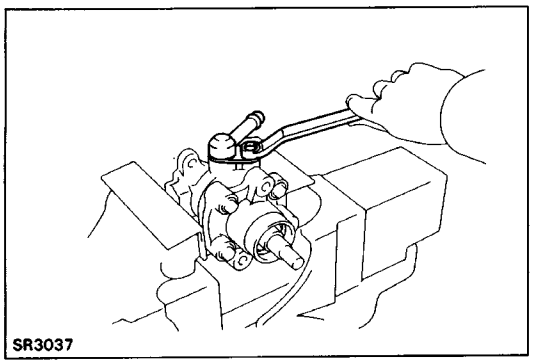

3. REMOVE SUCTION PORT UNION

(a) Remove the bolt and union.

(b) Remove the 0–ring from the union.

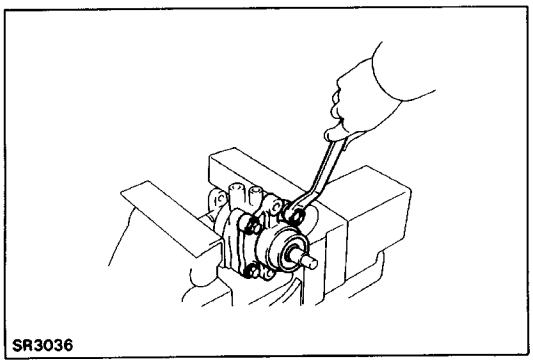

4. REMOVE FOUR FRONT HOUSING BOLTS

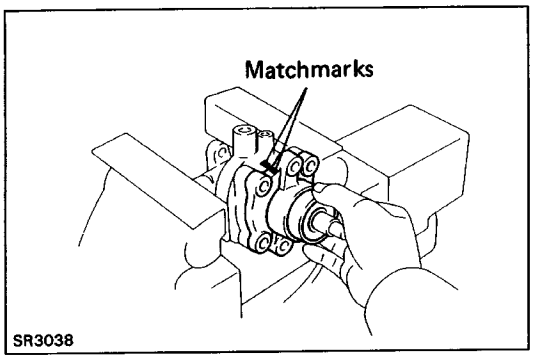

5. REMOVE FRONT HOUSING

(a) Place matchmarks on the front and rear housing.

(b) Using a plastic hammer, tap off the front housing.

NOTICE: Be careful that the vane plates, rotor and cam ring do not fall out.

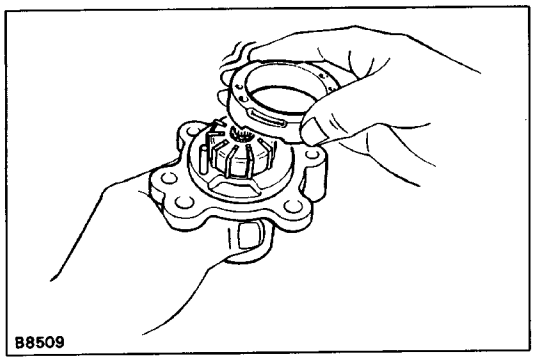

6. REMOVE CAM RING, ROTOR AND VANE PLATES

NOTICE: Be careful not to scratch the cam ring, rotor or vane plates.

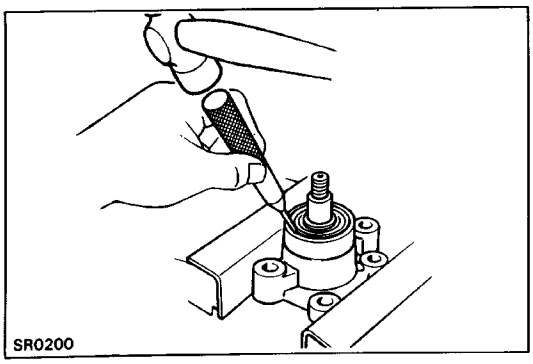

7. REMOVE ROTOR SHAFT

(a) Clamp the front housing in a vise.

NOTICE: Do not tighten the vise too tight.

(b) Using a chisel and hammer, pry off the oil seal.

(c) Using snap ring pliers, remove the snap ring.

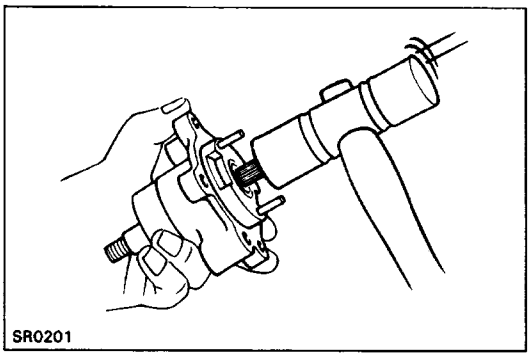

(d) Using a plastic hammer, lightly tap the rotor shaft out of the front housing.

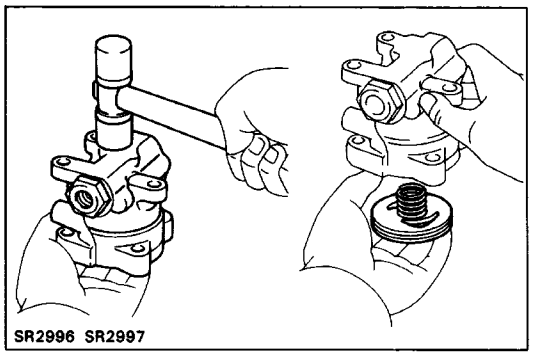

8. REMOVE REAR PLATE AND SPRING

Using a plastic hammer, tap the bottom end of the rear housing, and remove the rear plate and spring.

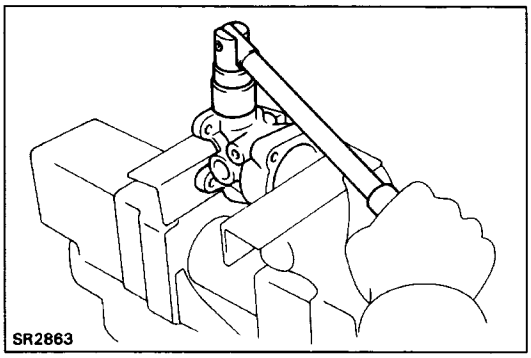

9. REMOVE PRESSURE PORT UNION

(a) Remove the pressure port union.

(b) Remove the two 0–rings from the union and hous–ing.

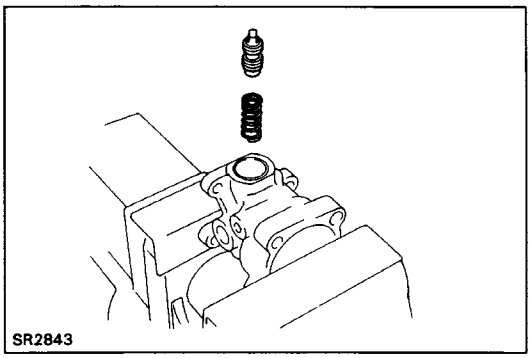

(c) Remove the flow control valve and spring.

NOTICE: Use care not to drop, scratch or nick this valve.

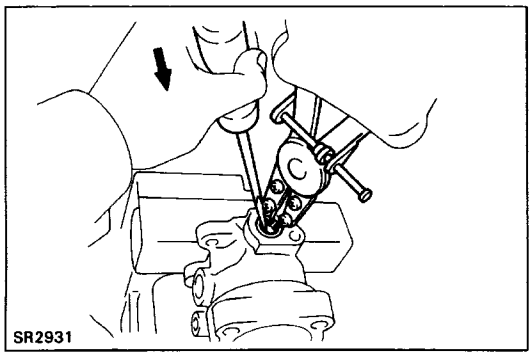

10. REMOVE FLOW CONTROL SPRING SEAT

(a) Temporarily install a bolt to the spring seat.

(b) Push the bolt and remove the snap ring with snap ring pliers.

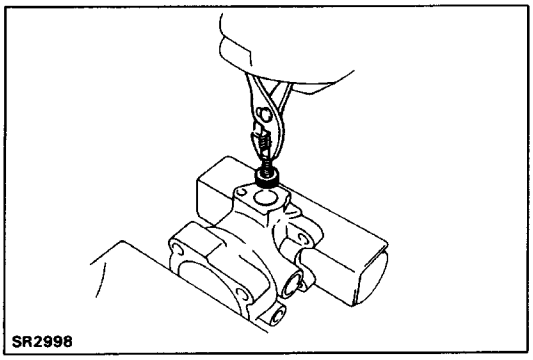
SR2998

(c) Pull out the bolt and remove the spring seat.
(d) Remove the O–ring from the spring seat.

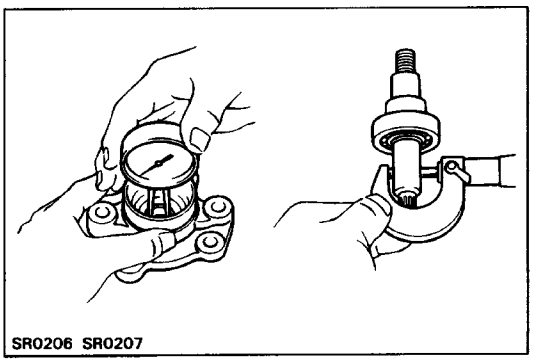
SR0206 SR0207

INSPECTION OF POWER STEERING PUMP

1. INSPECT BUSHING AND MEASURE BUSHING OIL CLEARANCE

(a) Check the bushing for wear or damage. The bushing cannot be replaced separately.
If wear or damage is found, replace entire housing.
(b) Check the oil clearance between the bushing and rotor shaft.
Maximum oil clearance: 0.07 mm (0.0028 in.)

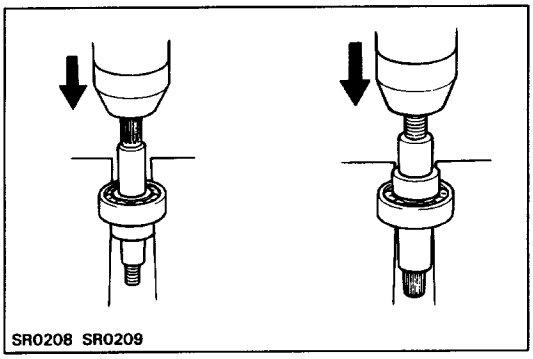
SR0208 SR0209

2. IF NECESSARY, REPLACE ROTOR SHAFT BEARING

(a) Using snap ring pliers, remove the snap ring.
(b) Using a press, press out the bearing.
(c) Using a press, press in a new bearing.
(d) Using snap ring pliers, install the snap ring.

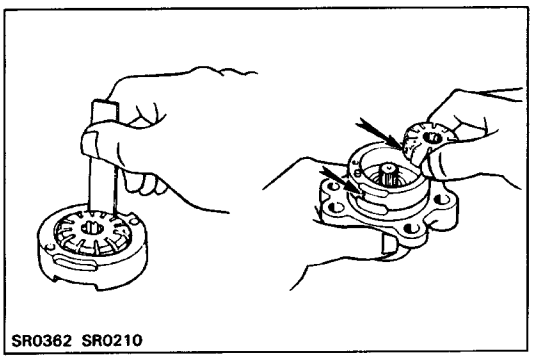
SR0362 SR0210

3. INSPECT ROTOR AND CAM RING

Measure the cam ring thickness. Check that the difference between the rotor and cam ring measurement is less than maximum.
Maximum difference: 0.06 mm (0.0024 in.)
If the difference is excessive, replace the cam ring with one having the same letter as on the rotor.

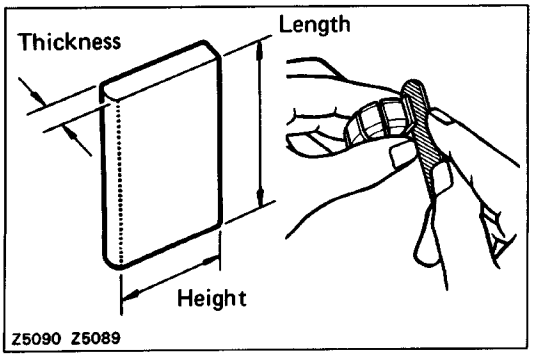

Z5090 Z5089

4. INSPECT AND MEASURE VANE PLATES

(a) Check the vane plates for wear or scratches.
(b) Measure the length, height and thickness of the vane plates.
Minimum length: 14.988 mm (0.5901 in.)
Minimum height: 8.1 mm (0.319 in.)
Minimum thickness: 1.797 mm (0.0707 in.)
(c) Measure the clearance between the vane plate and rotor groove.
Maximum clearance: 0.03 mm (0.0012 in.)

HINT: There are five vane lengths with the following rotor and cam ring numbers:

Rotor and cam ring number	Vane length mm (in.)
None	14.996 – 14.998 (0.59039 – 0.59047)
1	14.994 – 14.996 (0.59032 – 0.59039)
2	14.992 – 14.994 (0.59024 – 0.59032)
3	14.990 – 14.992 (0.59016 – 0.59024)
4	14.988 – 14.990 (0.59008 – 0.59016)

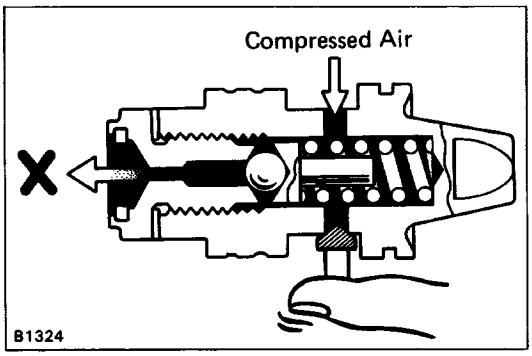

5. INSPECT FLOW CONTROL VALVE

(a) Check the flow control valve for wear or damage.

(b) Apply fluid to the valve and check that it falls smoothly into the valve hole by its own weight.

(c) Check the flow control valve for leakage. Close one of the holes and apply compressed air [392 – 490 kPa (4 – 5 kgf/cm^2, 57 – 71 psi)] into the opposite side, and confirm that air does not come out from the end hole.

If necessary, replace the valve with one having the same letter as inscribed on the rear housing.

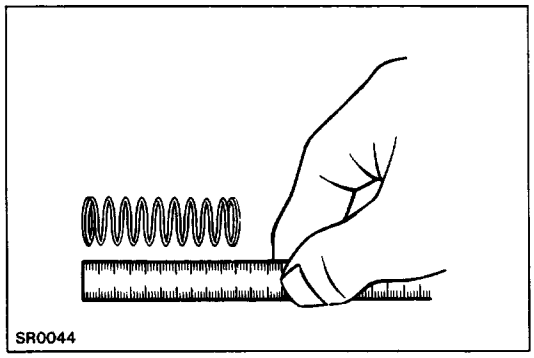

6. INSPECT FLOW CONTROL VALVE SPRING

Check that the spring is within specification.

Spring length: 35 – 37 mm (1.38 – 1.46 in.)

If the spring is not within specification, replace it.

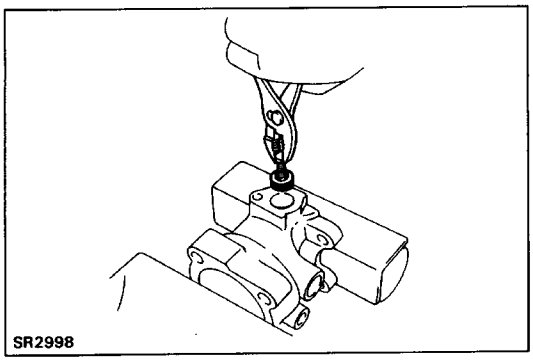

ASSEMBLY OF POWER STEERING PUMP

(See page SR–56)

1. INSTALL FLOW CONTROL SPRING SEAT

(a) Install a new O–ring to the spring seat.

(b) Install the spring seat to the housing.

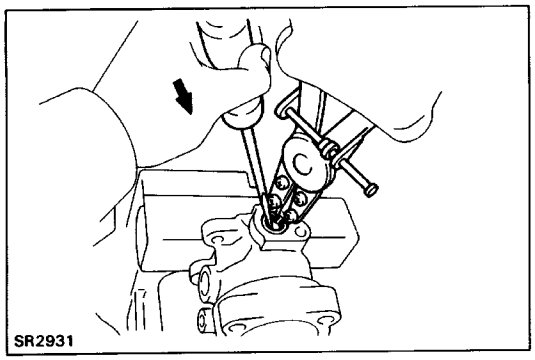

(e) Using snap ring pliers, install the snap ring.

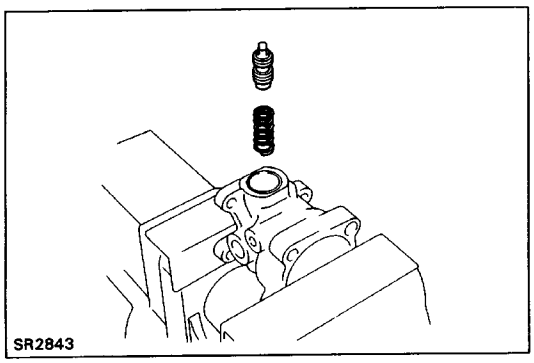

2. INSTALL FLOW CONTROL VALVE AND SPRING

(a) Install new O–ring to the housing.

(b) Install the spring and valve to the housing.

HINT: Be sure the letter inscribed on the flow control valve matches the letter stamped on the rear of the pump body.

Inscribed mark: A, B, C, D, E or F

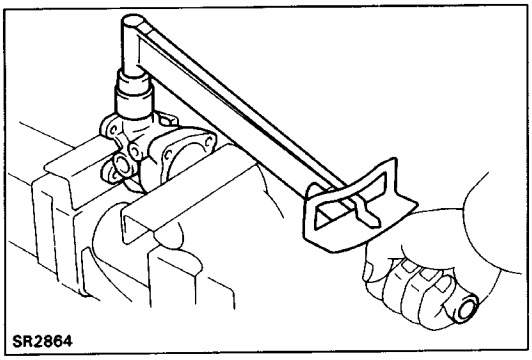

3. INSTALL PRESSURE PORT UNION

(a) Install a new O–ring to the pressure port union.

(b) Install and torque the union.

Torque: 69 N–m (700 kgf–cm, 51 ft–lbf)

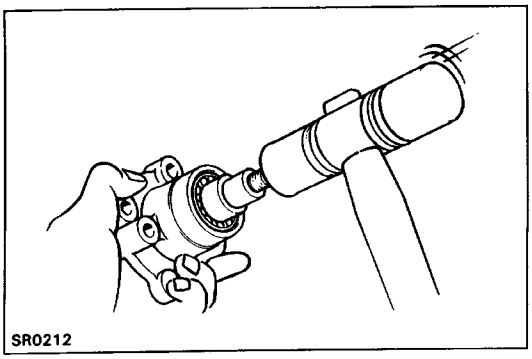

4. INSTALL ROTOR SHAFT TO FRONT HOUSING

Install the rotor shaft into the front housing by tapping it in with a plastic hammer.

5. INSTALL SNAP RING

Using snap ring pliers, install the snap ring to the front housing.

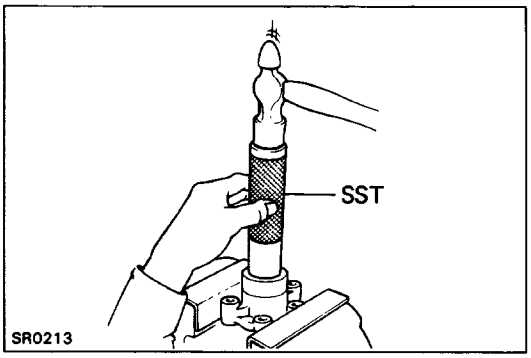

6. INSTALL OIL SEAL

(a) Apply a light coat of MP grease to a new oil seal lip.

(b) Using SST and a hammer, install the oil seal.

SST 09608–30012 (09608–04030)

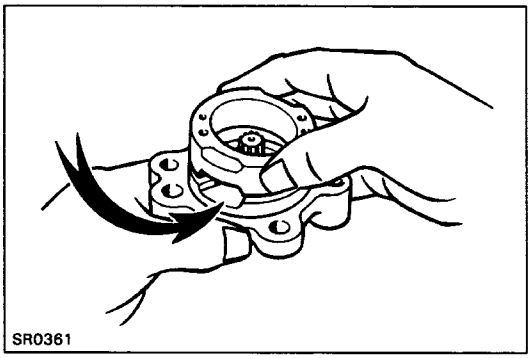

7. INSTALL NEW O–RING

8. INSTALL CAM RING

Align the fluid passages of the cam ring and front hous–ing, and install the cam ring.

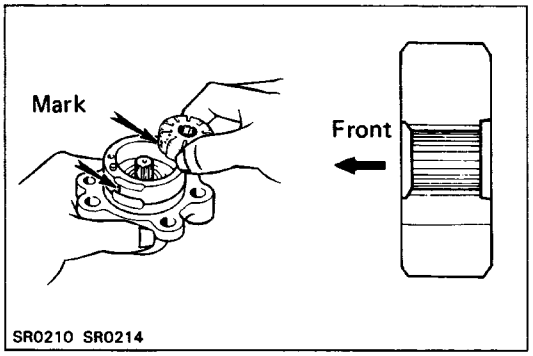

9. INSTALL ROTOR

Install the rotor with the chamfered end facing toward the front.

HINT: Be sure the letters inscribed on the cam ring and rotor match.

Inscribed mark: 1, 2, 3, 4, or None

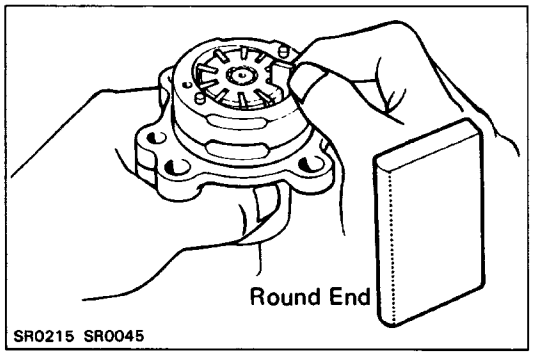

10. INSTALL VANE PLATES

Install the vane plates with the round end facing out–ward.

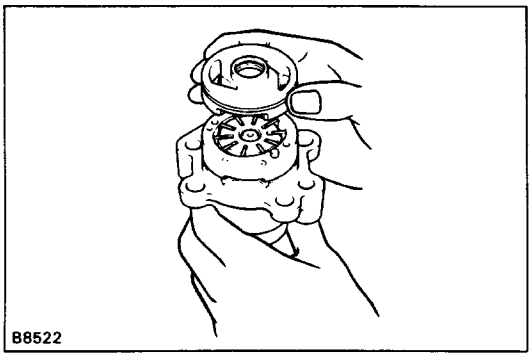

11. INSTALL REAR PLATE AND SPRING

(a) Align the fluid passages of the rear plate and cam ring, and install the rear plate.

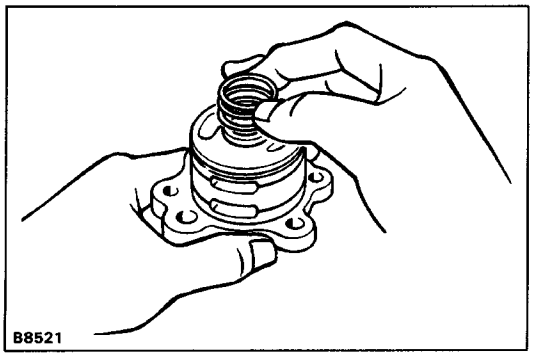

(b) Place the spring on the rear plate.

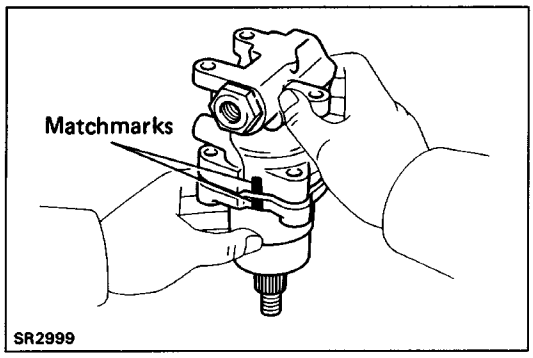

12. INSTALL REAR HOUSING

(a) Align the matchmarks on the front and rear housing and assemble them.

(b) Tighten the front and rear housing mount bolts by hand.

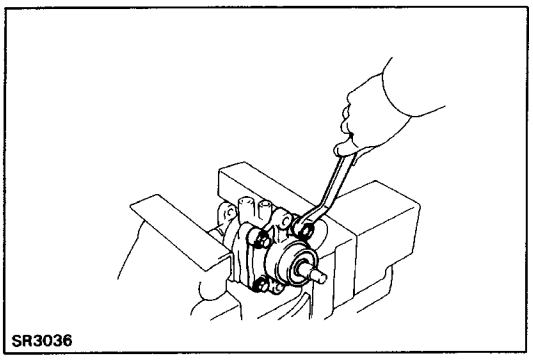

13. TIGHTEN FOUR HOUSING BOLTS

(a) Clamp the rear housing in a vise.

NOTICE: Do not tighten the vise too tight.

(b) Tighten the four housing bolts evenly in 3 or 4 passes.

Torque: 46 N–m (470 kgf –cm, 34 ft–lbf)

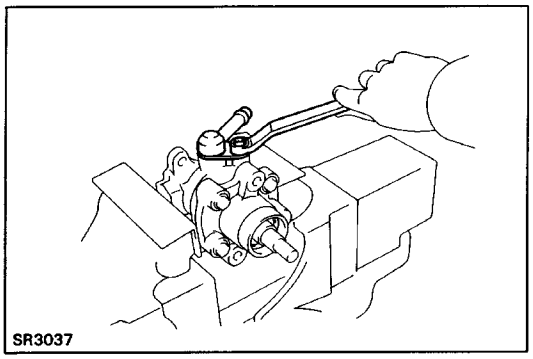

14. INSTALL SUCTION PORT UNION

Install and tighten the union with a new O–ring.

Torque: 13 N–m (130 kgf–cm, 9 ft–lbf)

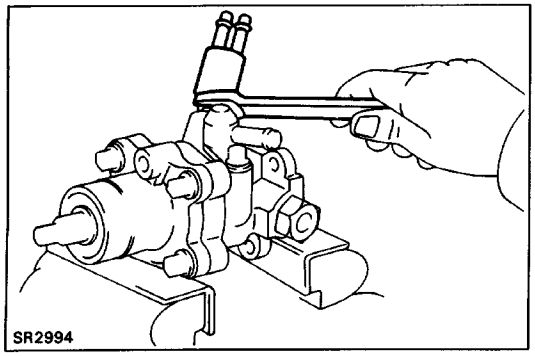

15. INSTALL AIR CONTROL VALVE

Install a *new union seat and the valve.

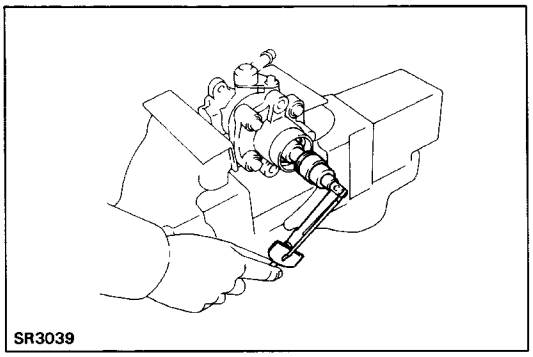

16. CHECK ROTOR SHAFT ROTATION CONDITION

(a) Check that the rotor shaft rotates smoothly without abnormal noise.

(b) Provisionally install the pulley nut and check the rotation torque.

Rotation torque:

0.3 N–m (2.8 kgf–cm, 2.4 in.–lbf) or less

Gear Housing (2WD)

REMOVAL AND INSTALLATION OF GEAR HOUSING

Remove and install the parts as shown.

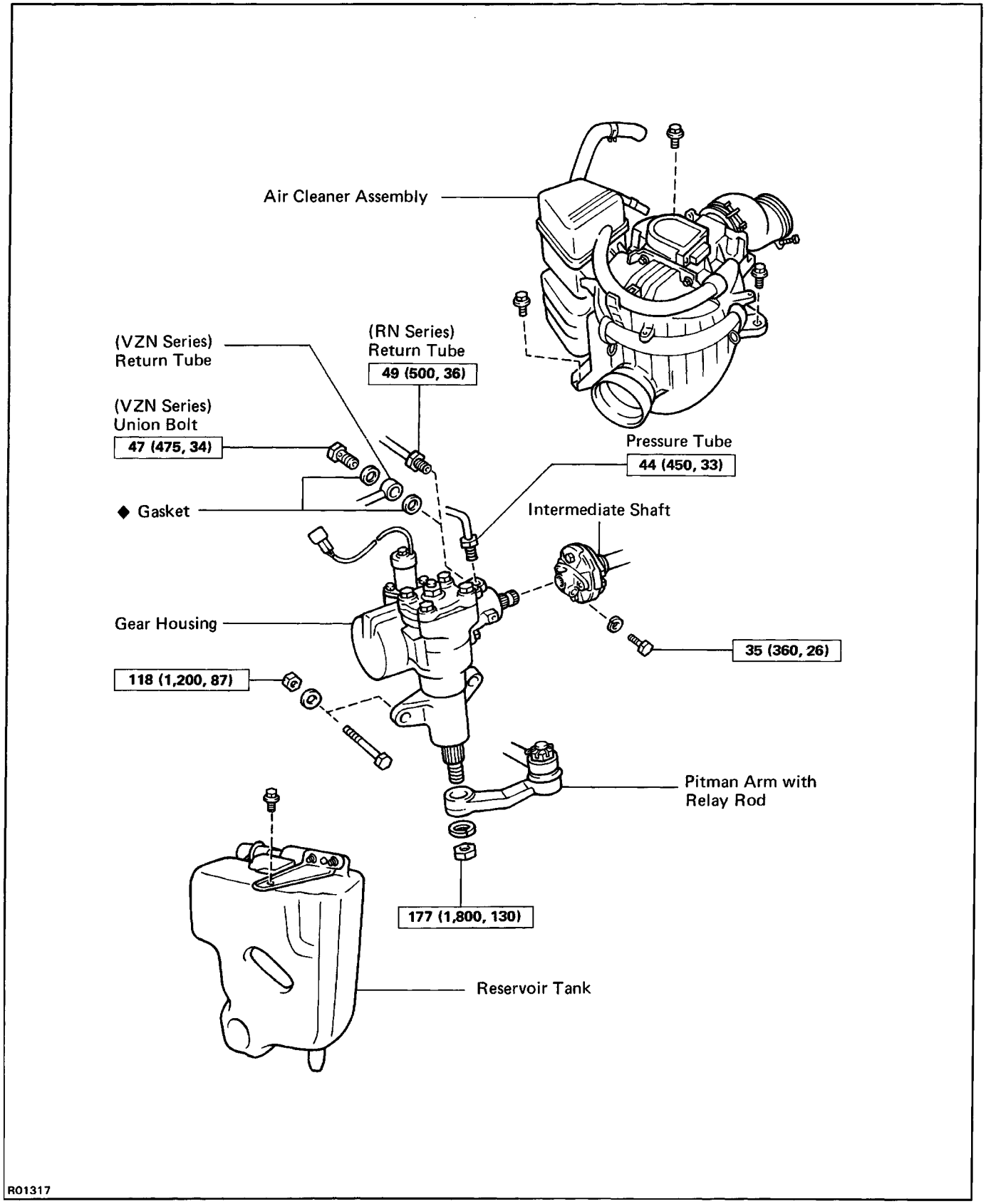

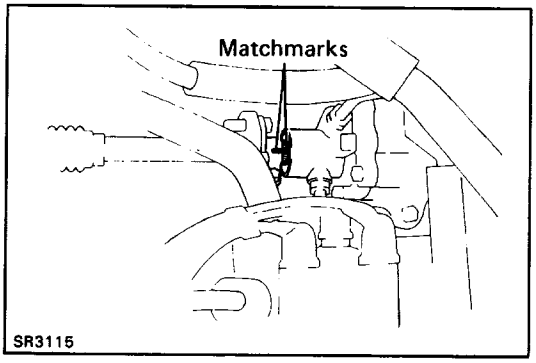

(MAIN POINTS OF REMOVAL AND INSTALLATION)

1. DISCONNECT UNIVERSAL JOINT

(a) Loosen the column side set bolt.

(b) Remove the gear side set bolt.

(c) Place matchmarks on the flexible coupling and worm shaft.

(d) Slide the shaft rearward to disconnect the shaft from the worm shaft.

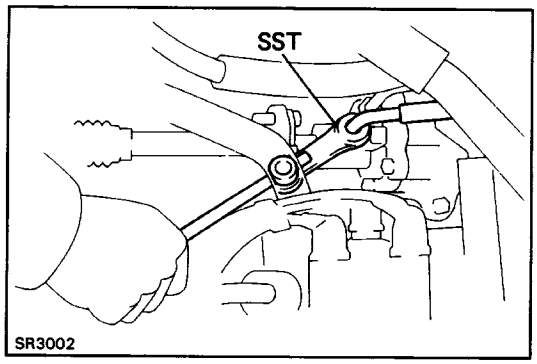

2. DISCONNECT PRESSURE AND RETURN TUBES FROM GEAR HOUSING

Using SST, disconnect the pressure and return tubes from the gear housing.

SST 09631–22020

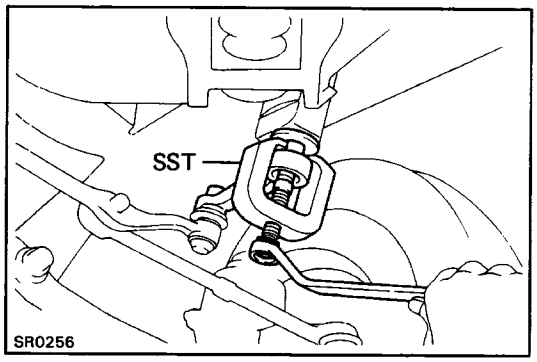

3. DISCONNECT AND CONNECT PITMAN ARM

(a) Using SST, disconnect the pitman arm from the gear housing.

SST 09610–55012

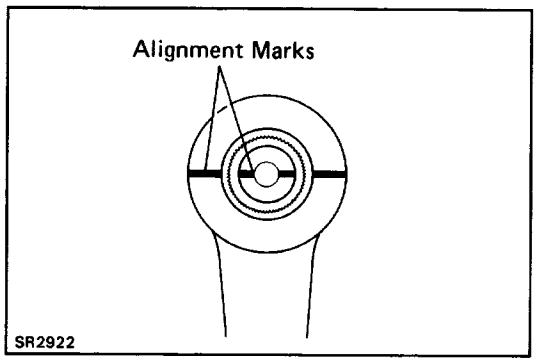

(b) When connecting, align alignment marks on the pitman arm and the cross shaft, and install the spring washer and nut.

Torque: 177 N–m (1,800 kgf–cm, 130 ft–lbf)

COMPONENTS

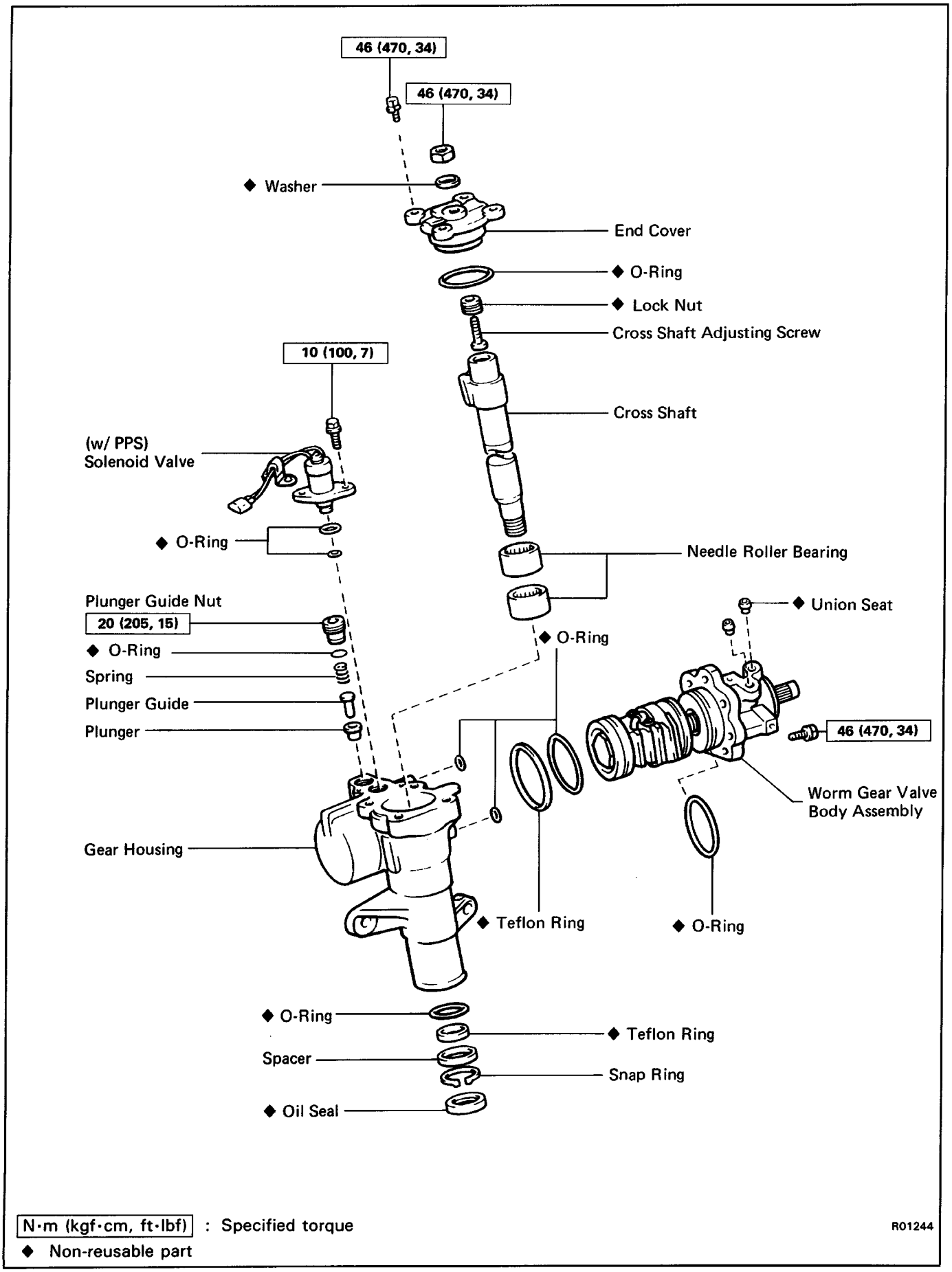
46 (470, 34)
46 (470, 34)
◆ Washer
End Cover
◆ O-Ring
◆ Lock Nut
Cross Shaft Adjusting Screw
10 (100, 7)
Cross Shaft
(w/ PPS)
Solenoid Valve
◆ O-Ring
Needle Roller Bearing
Plunger Guide Nut
20 (205, 15)
◆ Union Seat
◆ O-Ring
◆ O-Ring
Spring
Plunger Guide
Plunger
46 (470, 34)
Worm Gear Valve
Body Assembly
Gear Housing
◆ Teflon Ring
◆ O-Ring
◆ O-Ring
◆ Teflon Ring
Spacer
Snap Ring
◆ Oil Seal
N·m (kgf·cm, ft·lbf) : Specified torque
◆ Non-reusable part
R01244

DISASSEMBLY OF GEAR HOUSING

(See page SR–67)

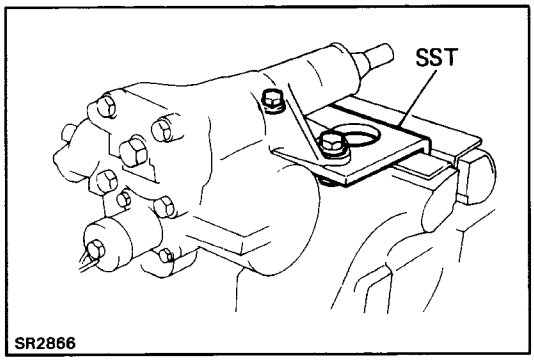

1. MOUNT HOUSING ON STAND

Mount the gear housing on SST and clamp SST in a vise.
SST 09630–00012 (09631–00140)

2. (w/PPS)

REMOVE SOLENOID VALVE

(a) Remove the two bolts and solenoid valve.
(b) Remove the 0–rings.

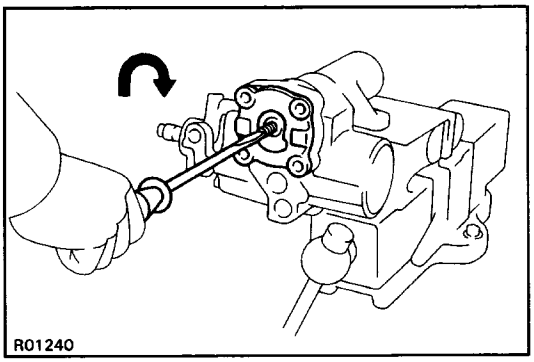

3. REMOVE END COVER

(a) Remove the adjusting screw lock nut.
(b) Remove the four bolts.
(c) Screw in the adjusting screw until the cover comes off.

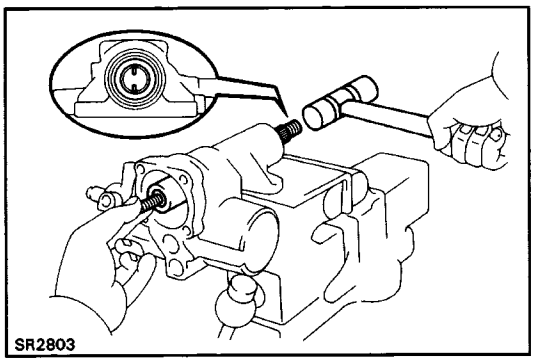

4. REMOVE CROSS SHAFT

Using a plastic hammer, tap on the cross shaft end and pull out the shaft.

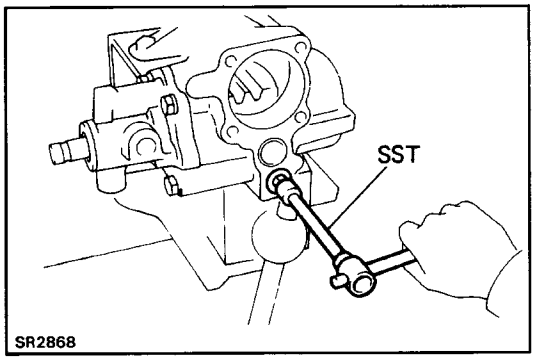

5. REMOVE PLUNGER GUIDE NUT

(a) Using SST, remove the plunger guide nut.
SST 09043–38100
(b) Remove the spring, plunger and plunger guide.
(c) Remove the 0–ring.

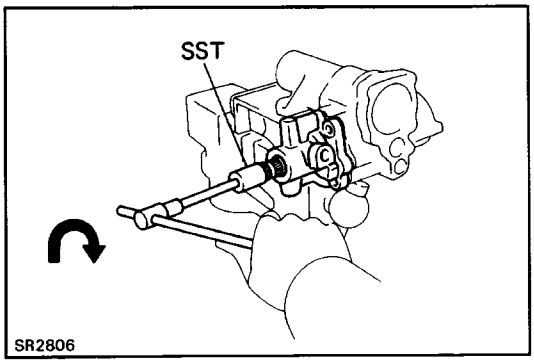

6. REMOVE WORM GEAR VALVE BODY ASSEMBLY

(a) Remove the four cap bolts from the housing.
(b) Using SST, turn the worm shaft clockwise with holding the power piston nut by your finger so it cannot move.
SST 09616–00010

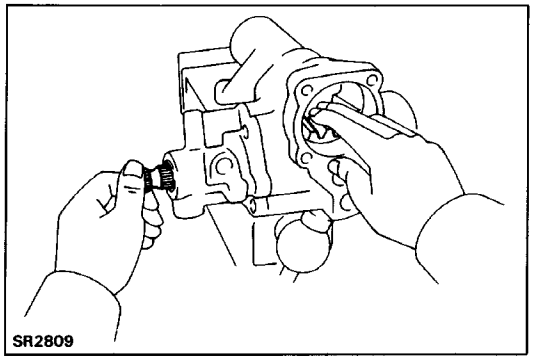

(c) Pull out the valve body and power piston assembly.

NOTICE: Ensure that the power piston nut does not come off the worm shaft.

(d) Remove the 0–ring.

INSPECTION AND REPLACEMENT OF GEAR HOUSING

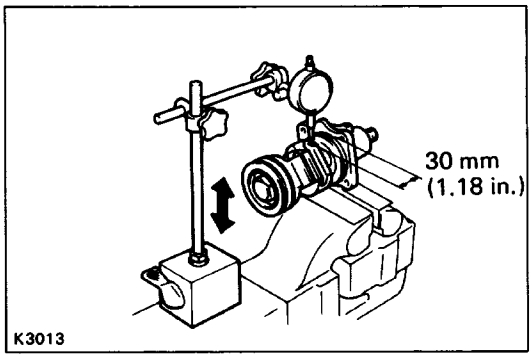

1. CHECK BALL CLEARANCE

(a) Mount the valve body in a vise.

(b) Using a dial indicator, check the ball clearance.
Move the worm gear up and down.
Maximum ball clearance: 0.15 mm (0.0059 in.)
If clearance is excessive, the power control valve assem–bly must be replaced.

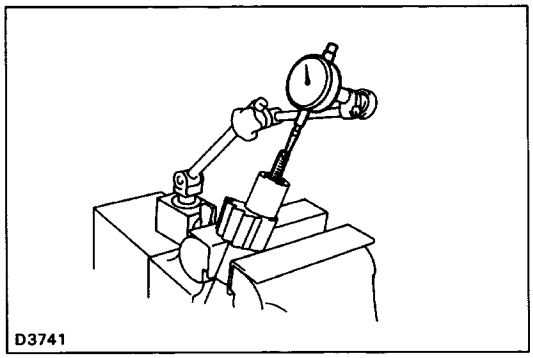

2. INSPECT CROSS SHAFT ADJUSTING SCREW THRUST CLEARANCE

(a) Clamp the cross shaft in a vise.

(b) Using a dial indicator, measure the thrust clearance.
Thrust clearance: 0.03 – 0.05 mm
(0.0012 – 0.0020 in.)
If thrust clearance is not correct, adjust the thrust clear–ance.

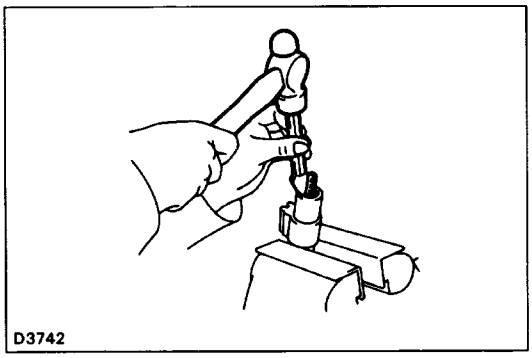

3. IF NECESSARY, ADJUST THRUST CLEARANCE

(a) Using a chisel and hammer, remove the lock nut stake.

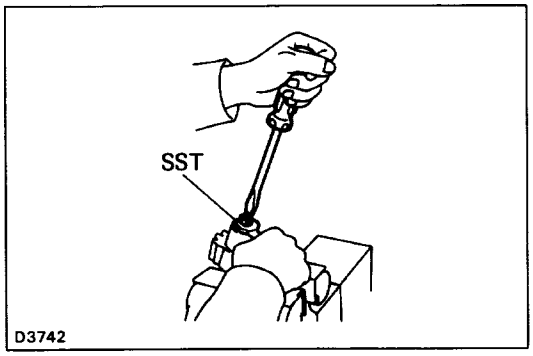

(b) Using SST, remove the lock nut.
SST 09630–00012 (09631–00050)

(c) Adjust the adjusting screw for correct thrust clear–ance and tighten a new lock nut.

(d) Stake the lock nut.

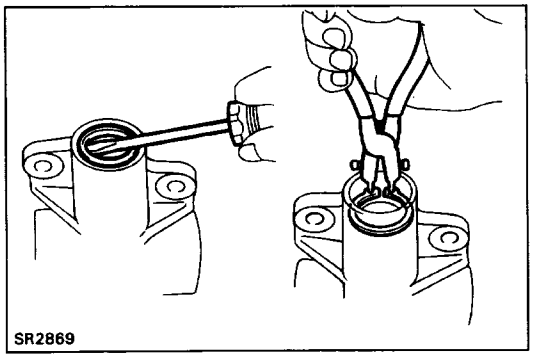

4. REPLACE NEEDLE ROLLER BEARINGS

(a) Using a screwdriver, pry out the oil seal.

(b) Using snap ring pliers, remove the snap ring.

(c) Remove the metal spacer, teflon ring and 0–ring.

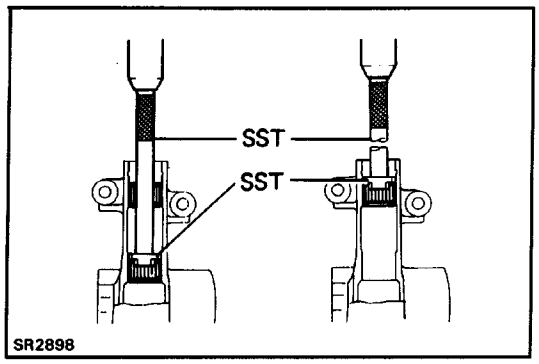

(d) Using SST, press out the bearings.
SST 09630–00012 (09631–00020, 09631–00070)

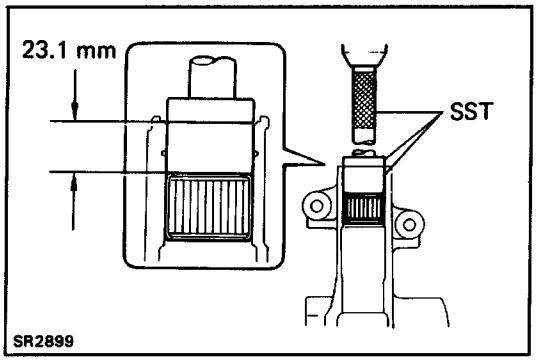

(e) Using SST, press in a new lower bearing.
SST 09630–00012 (09631–00020, 09631–00100, 09631–00170)

HINT: Install the lower bearing so that it is positioned 23.1 mm (0.909 in.) away from the housing inner end surface.

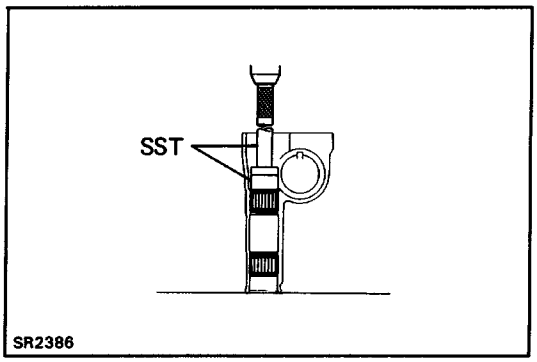

(f) Using SST, press in a new upper bearing.
SST 09630–00012 (09631–00020, 09631–00170)

HINT: The bearing's top end should be installed so that it aligns with the housing end surface.

(g) Install a new O–ring and metal spacer.

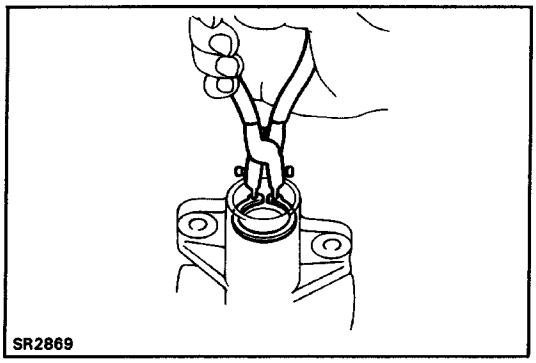

(h) Using snap ring pliers, install the snap ring.

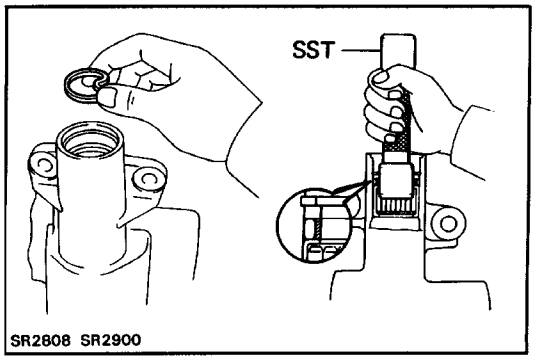

(i) Form a new teflon ring into a heart shape and install it with hand.

(j) Using SST, form the teflon ring.

NOTICE: The teflon ring must be squeezed before inserting the cross shaft or damage will result.

SST 09630–00012 (09631–00120)

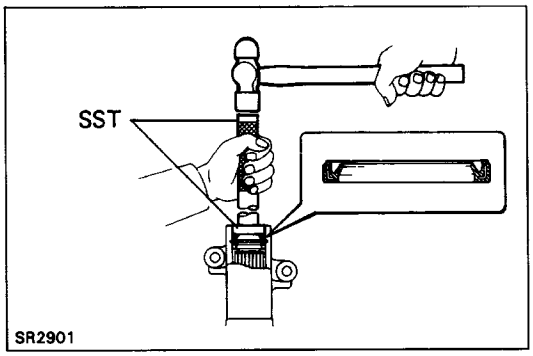

(k) Using SST, drive a new oil seal into the gear hous–ing.
SST 09630–00012 (09631–00020, 09631–00170)

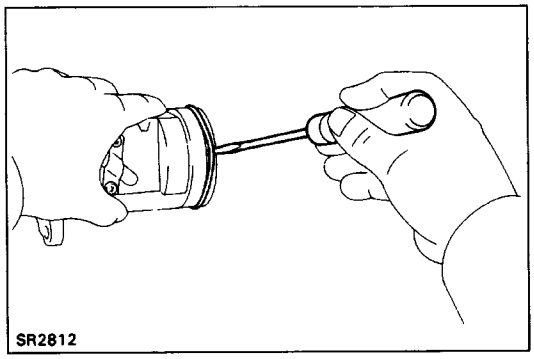

5. IF NECESSARY, REPLACE CONTROL VALVE TEFLON RING AND O–RING

(a) Using a screwdriver, remove the teflon ring and 0–ring.
NOTICE: Be careful not to damage the control valve.

(b) Install a new O–ring.

(c) Expand a new teflon ring with your fingers.
NOTICE: Be careful not to over–expand the teflon ring.

(d) Install the teflon ring.

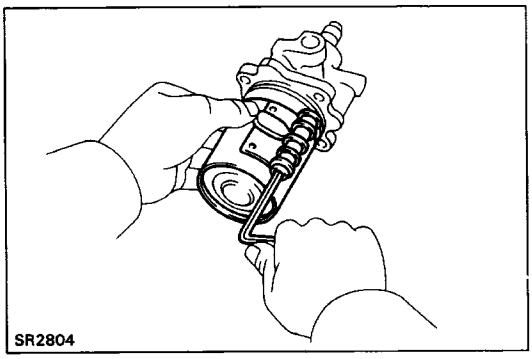

(e) Coat the teflon ring with power steering fluid and snug it down with piston ring compressor for 5 – 7 minutes.

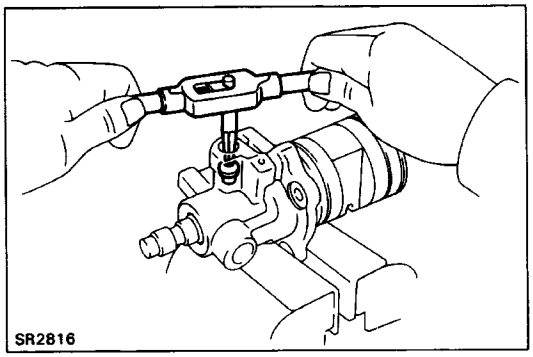

6. IF NECESSARY, REPLACE UNION SEAT

(a) Using a screw extractor, remove the union seat.

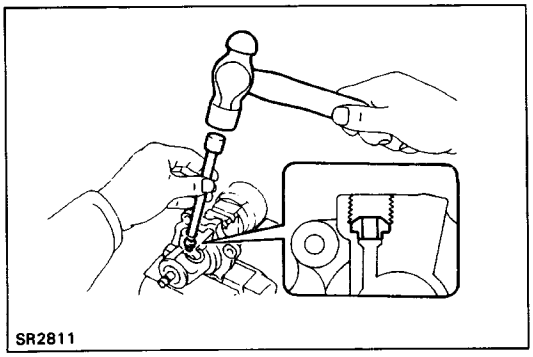

(b) Using a plastic hammer and extension bar, tap in a new union seat.

ASSEMBLY OF GEAR HOUSING

(See page SR–67)

1. INSTALL WORM GEAR VALVE BODY ASSEMBLY

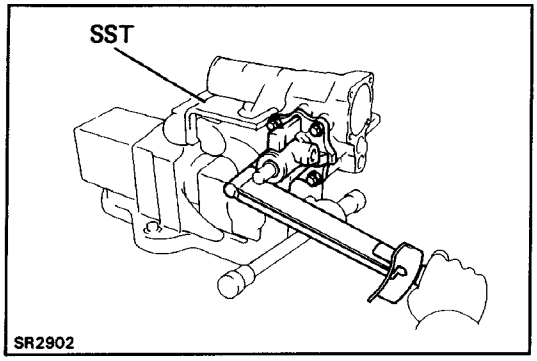

(a) Install the three 0–rings to the gear housing and valve body.

(b) Mount the gear housing on SST and clamp SST in vise.
SST 09630–00012 (09631–00140)

(c) Install and torque the four bolts.
Torque: 46 N–m (470 kgf–cm, 34 ft–lbf)
NOTICE: Be careful not to damage the teflon ring.

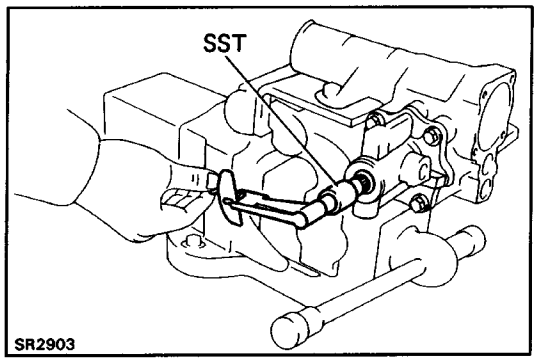

(d) Using SST, check the worm gear preload.
SST 09616–00010
Preload (Starting): 0.3 – 0.5 N–m
(3 – 5.5 kgf–cm, 2.6 – 4.8 in.–lbf)

HINT: Hold the power piston nut to prevent it from turning.
If preload is not correct, replace the worm gear assembly.

2. INSTALL PLUNGER GUIDE NUT

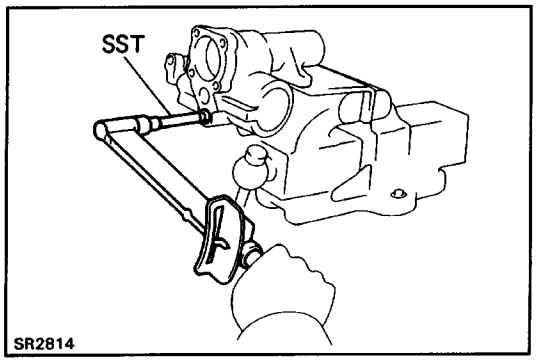

(a) Install the plunger, plunger guide and spring.

(b) Install a new O–ring to the plunger guide nut and install the plunger guide nut with SST.
SST 09043–38100
Torque: 20 N–m (205 kgf–cm, 15 ft–lbf)

3. INSTALL CROSS SHAFT AND END COVER

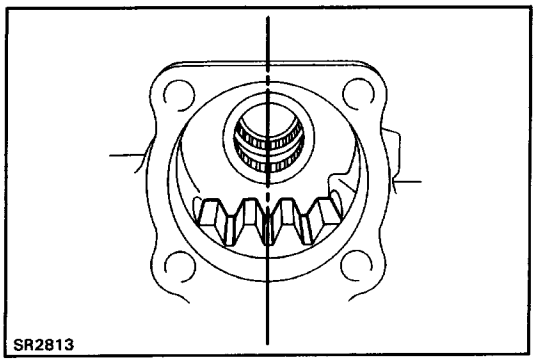

(a) Install a new O–ring on the end cover.

(b) Assemble the cross shaft to the end cover.
HINT: Fully loosen the adjusting screw.

(c) Set the worm gear at the center of the gear housing.

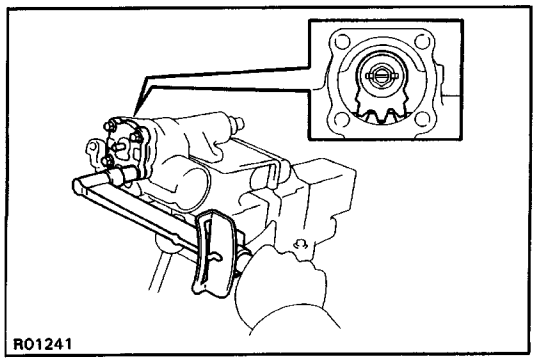

(d) Install and push the cross shaft into the gear housing so that the center teeth mesh together.

(e) Install the four bolts. Torque the bolts in a diagonal pattern.
Torque: 46 N–m (470 kgf–cm, 34 ft–lbf)

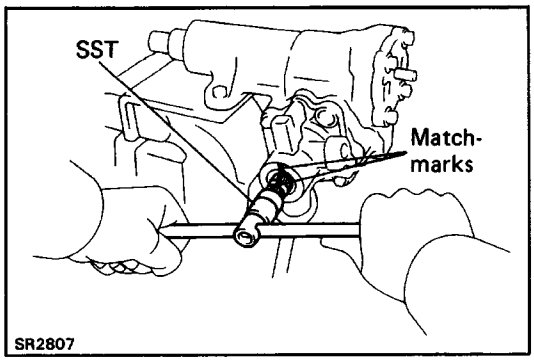

4. DETERMINE CENTER POSITION OF GEAR HOUSING

(a) Using SST, turn the worm shaft so full lock in both directions and determine the exact center.
SST 09616–00010

(b) Place matchmarks on the worm shaft and housing to show neutral position.

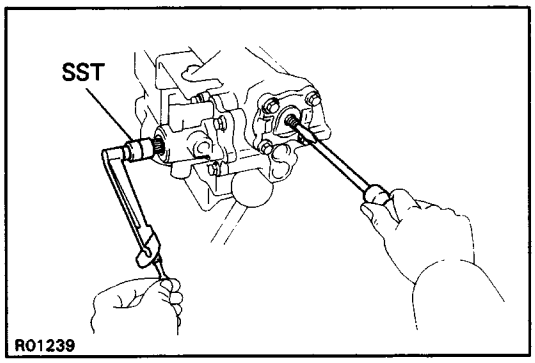

5. ADJUST CROSS SHAFT ADJUSTING SCREW

(a) Install SST with a torque meter on the worm shaft.
SST 09616–00010

(b) Turn the adjusting screw while measuring the pre–load until it should be increased 0.2 – 0.4 N–m (2 – 4 kgf–cm, 1.7 – 3.5 in.–lbf) more than the preload listed in step 1.

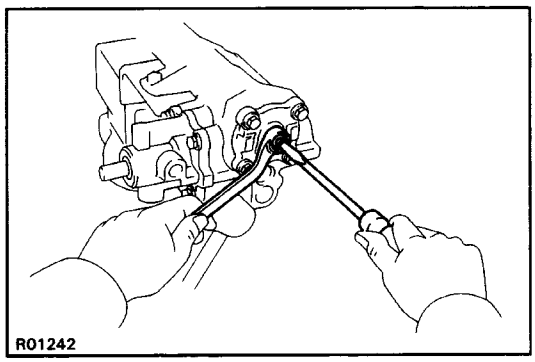

6. INSTALL NEW WASHER

7. INSTALL AND TIGHTEN LOCK NUT

Torque the lock nut while holding the adjusting screw.
Torque: 46 N–m (470 kgf–cm, 34 ft–lbf)

8. CHECK TOTAL PRELOAD

Using SST and a torque meter, check total preload.
SST 09616–00010
Total preload (Starting):
0.5 – 0.9 N–m (5 – 9.5 kgf–cm, 4.3 – 8.3 in.–lbf)

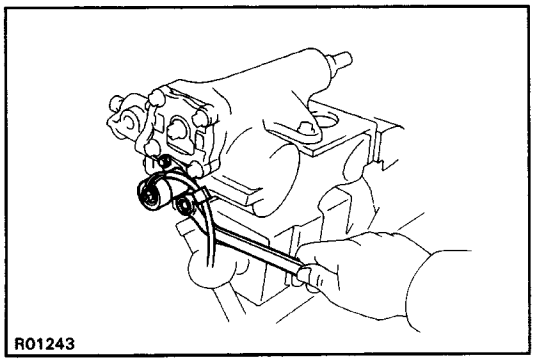

9. INSTALL SOLENOID VALVE (w/ PPS)

(a) Install new 0–rings to the solenoid valve.

(b) Install the solenoid valve with the two bolts.

Gear Housing (4WD)

REMOVAL AND INSTALLATION OF GEAR HOUSING

Remove and install the parts as shown.

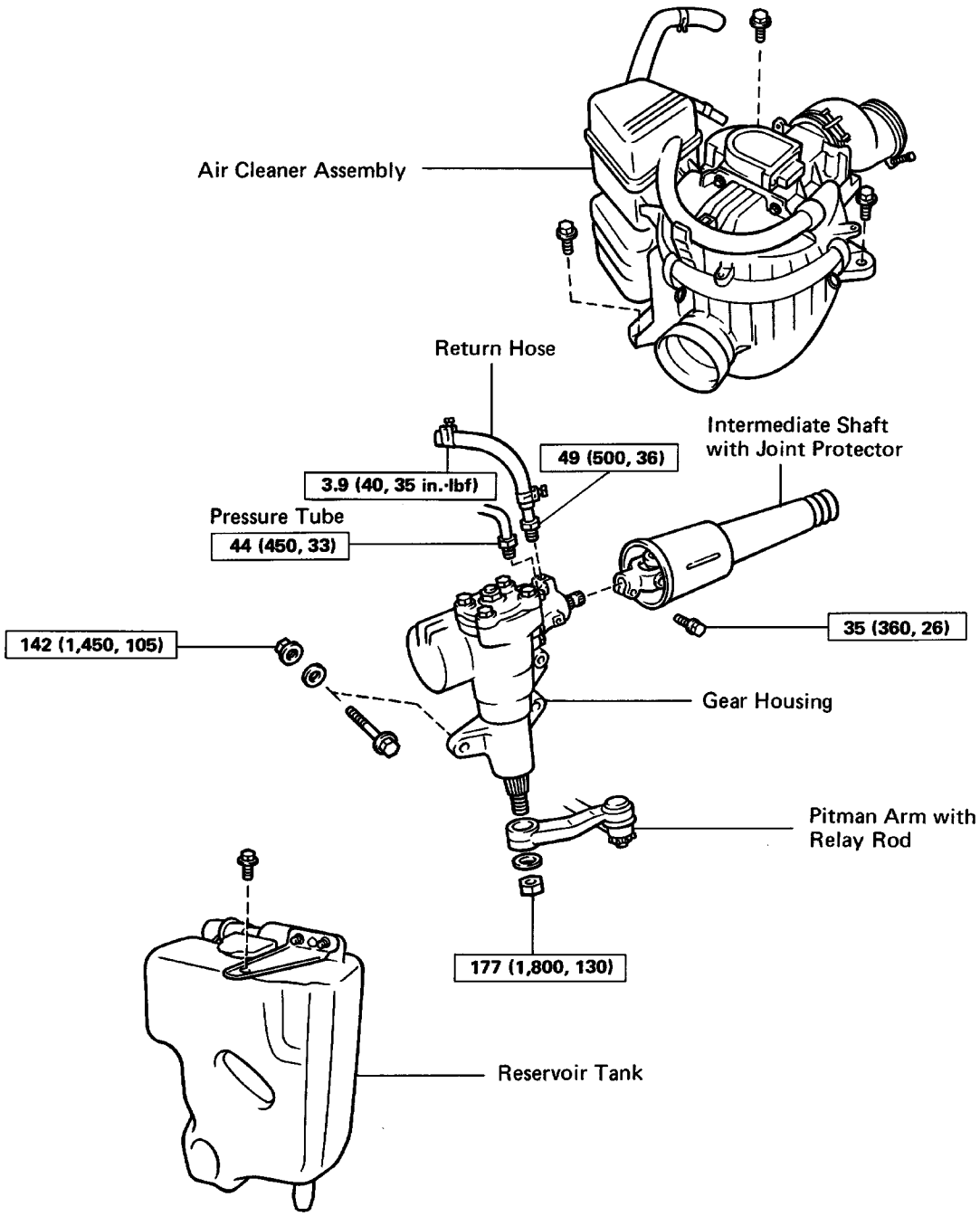

R01191

N·m (kgf·cm, ft·lbf) : Specified torque

(MAIN POINT OF REMOVAL AND INSTALLATION)

1. REMOVE RESERVOIR TANK

2. REMOVE AIR CLEANER ASSEMBLY

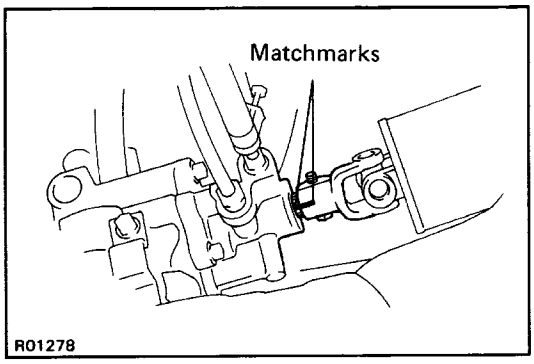

3. DISCONNECT UNIVERSAL JOINT

(a) Loosen the column side set bolt.
(b) Remove the gear side set bolt.
(c) Place matchmarks on the universal joint and worm shaft.
(d) Slide the shaft rearward to disconnect the shaft from the worm shaft.

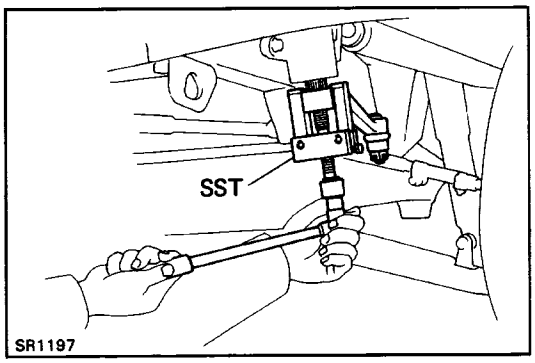

4. DISCONNECT AND CONNECT PITMAN ARM

(a) Remove the pitman arm set nut.
(b) Using SST, disconnect the pitman arm from the gear housing.
SST 09628–62011

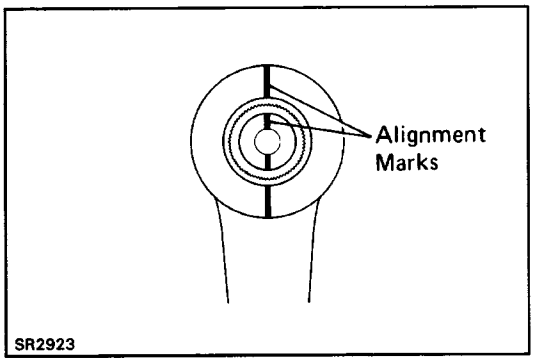

(c) When connecting, align the alignment marks on the sector shaft and pitman arm and install it.

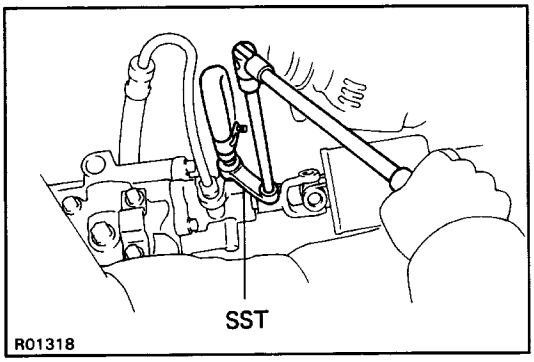

5. DISCONNECT PRESSURE TUBE FROM GEAR HOUSING

Using SST, disconnect the pressure tube from the gear housing.
SST 09631–22020

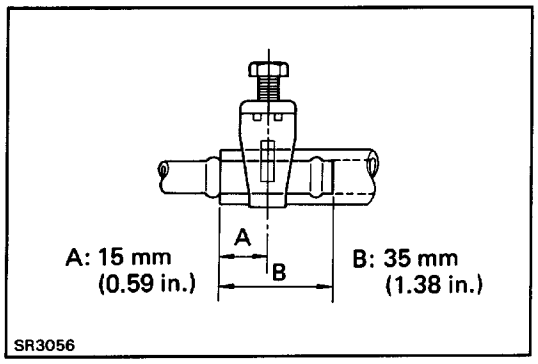

6. DISCONNECT AND CONNECT RETURN HOSE

(a) Using a screwdriver, loosen the clamp and discon–nect the return hose.

(b) When connecting, check that hose and tube con–nections are as shown and tighten the screw.
NOTICE: At installation, be sure that the clamp does not touch the other parts.

COMPONENTS

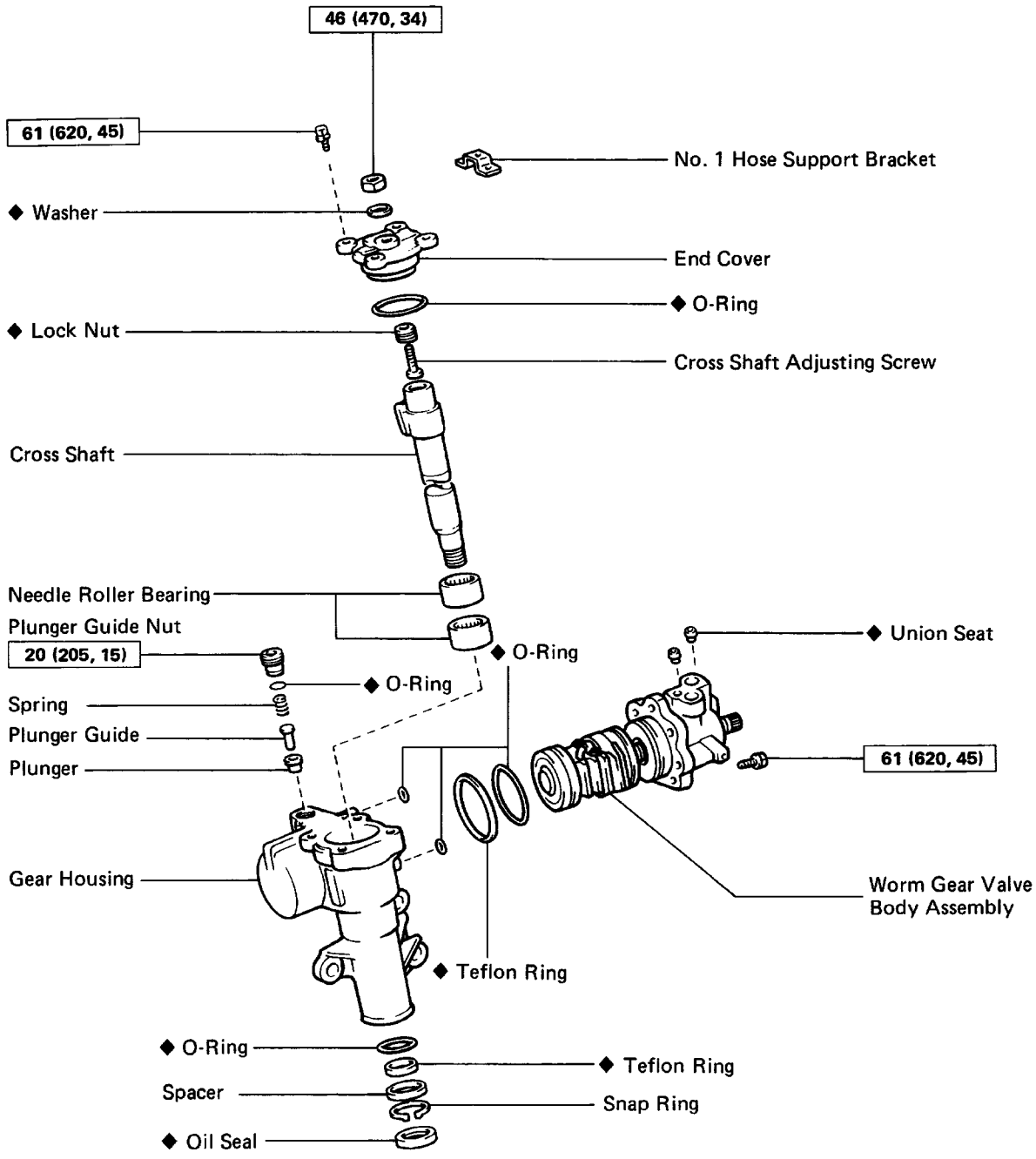

N·m (kgf·cm, ft·lbf) : Specified torque

◆ Non-reusable part

R01233

DISASSEMBLY OF GEAR HOUSING

(See page SR–76)

1. MOUNT HOUSING ON STAND

Mount the gear housing on SST and clamp SST in a vise.
SST 09630–00012 (09631–00140)

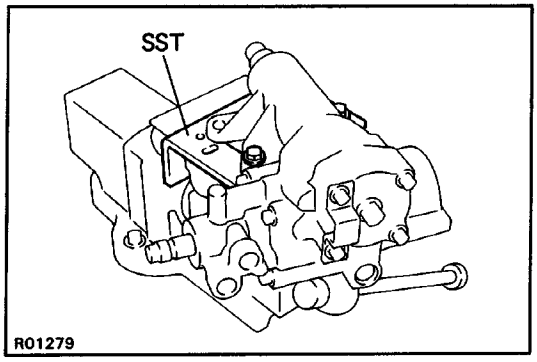

2. REMOVE END COVER

(a) Remove the adjusting screw lock nut.

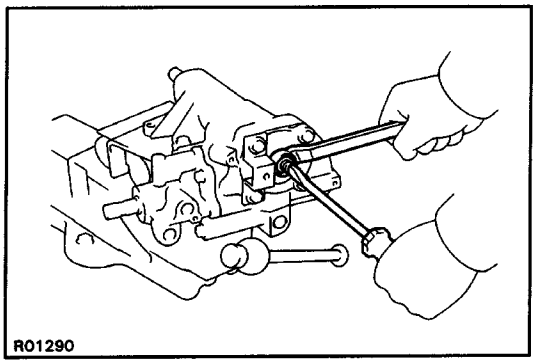

(b) Remove the four bolts and No. 1 hose support bracket.

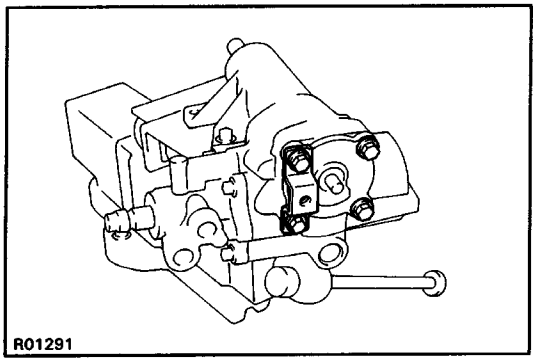

(c) Screw in the adjusting screw until the cover comes off.

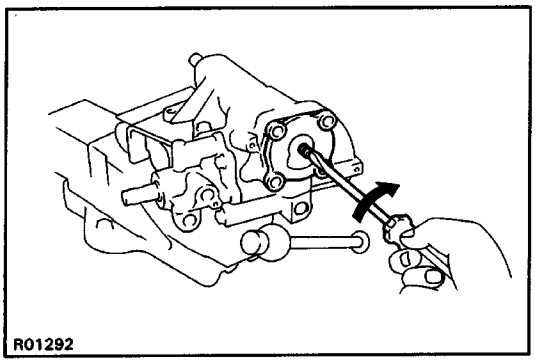

3. REMOVE CROSS SHAFT

Using a plastic hammer, tap on the cross shaft end and pull out the shaft.

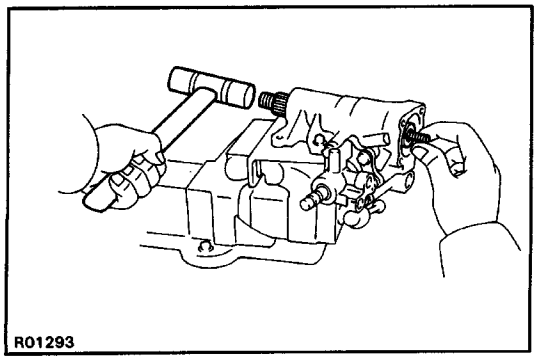

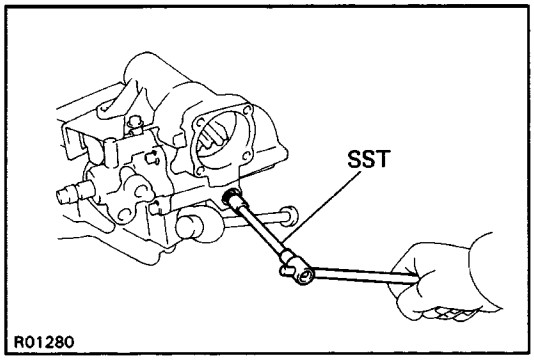

4. REMOVE PLUNGER GUIDE NUT

(a) Using SST, remove the plunger guide nut.
SST 09043–38100

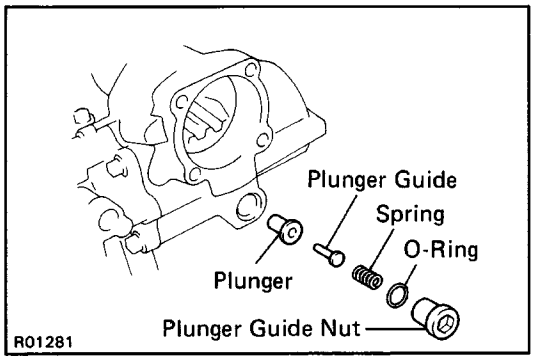

(b) Remove the spring, plunger and plunger guide nut.
(e) Remove the O–ring.

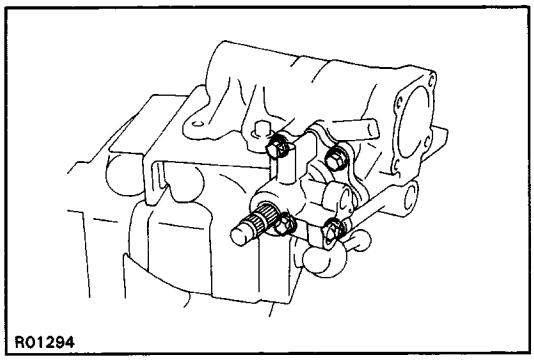

5. REMOVE WORM GEAR VALVE BODY ASSEMBLY

(a) Remove the four cap bolts from the housing.

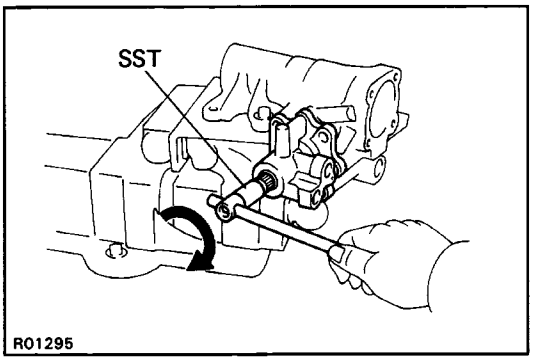

(b) Using SST, turn the shaft clockwise to disconnect the worm gear valve body assembly from the gear housing.
SST 09616–00010

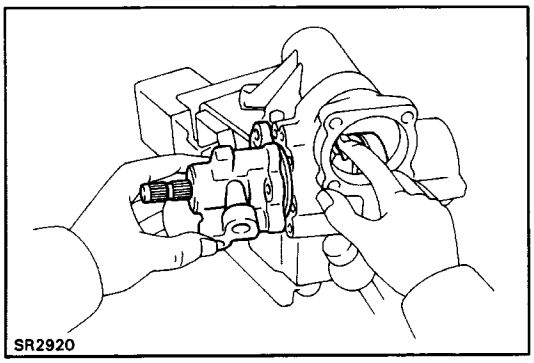

(c) Hold the power piston nut with your thumb so it cannot move, then withdraw the valve body and power piston assembly.
NOTICE: Ensure that the power piston nut does not come off the worm shaft.

(d) Remove the 0–ring.

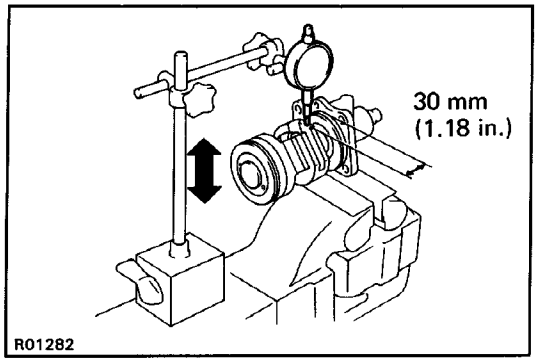

INSPECTION AND REPLACEMENT OF GEAR HOUSING

1. CHECK BALL CLEARANCE

(a) Mount the valve body in a vise.

(b) Using a dial indicator, check the ball clearance.

Move the worm gear up and down.

Maximum ball clearance: 0.15 mm (0.0059 in.)

If clearance is excessive, the power control valve assem–bly must be replaced.

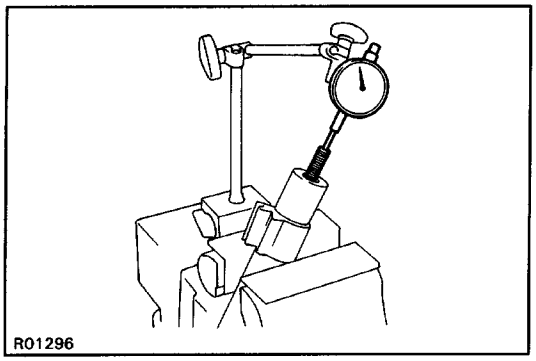

2. INSPECT CROSS SHAFT ADJUSTING SCREW THRUST CLEARANCE

(a) Clamp the cross shaft in a vise.

(b) Using a dial indicator, measure the thrust clearance.

Thrust clearance: 0.03 – 0.05 mm (0.0012 – 0.0020 in.)

If thrust clearance is not correct, adjust the thrust clear–ance.

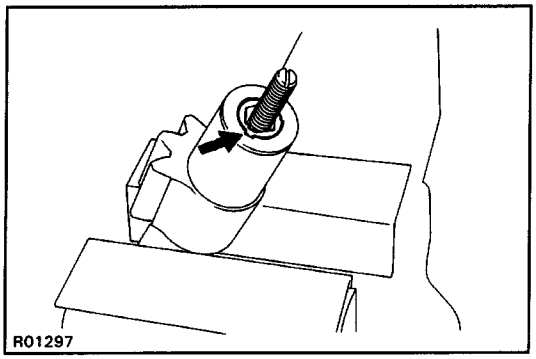

3. IF NECESSARY, ADJUST THRUST CLEARANCE

(a) Using a chisel and hammer, remove the lock nut stake.

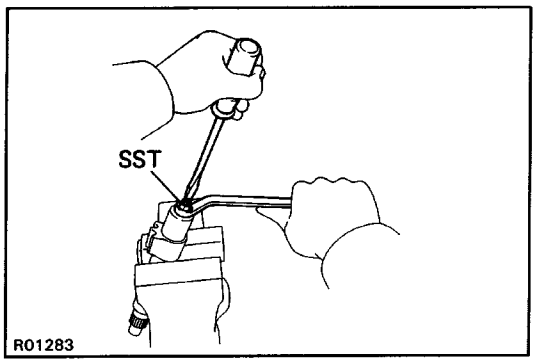

(b) Using SST, remove the lock nut.

SST 09630–00012 (09631–00050)

(c) Adjust the adjusting screw for correct thrust clear–ance and tighten a new lock nut.

(d) Stake the lock nut.

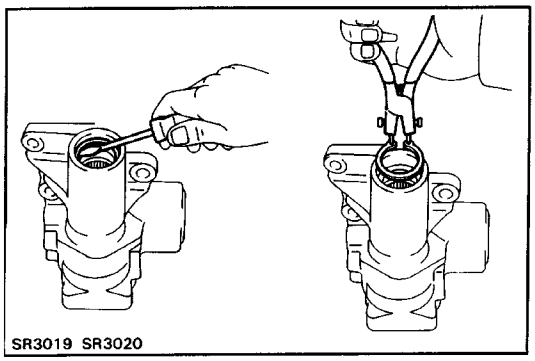

4. IF NECESSARY, REPLACE NEEDLE ROLLER BEAR-INGS

(a) Using a screwdriver, pry out the oil seal.

(b) Using snap ring pliers, remove the snap ring.

(c) Remove the metal spacer, teflon ring and 0–ring.

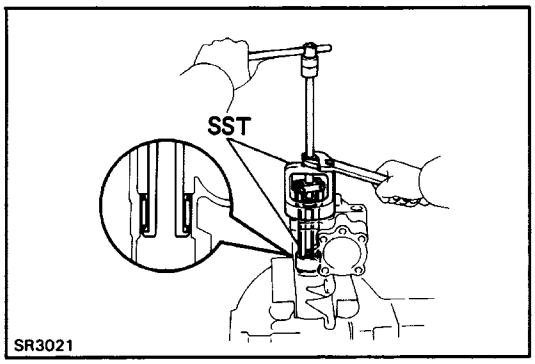

(d) Using SST, remove the upper bearing.
SST 09612–65014 (09612–01030)

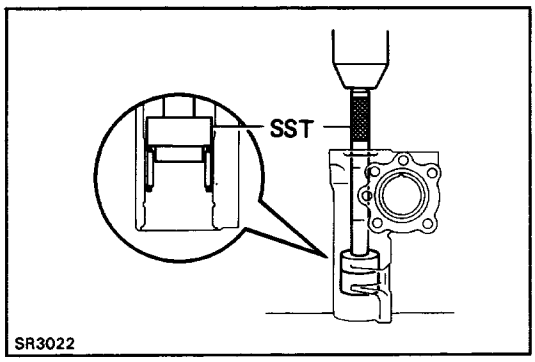

(e) Using SST, press out the lower bearing.
SST 09630–00012 (09631–00020, 09631–00090)

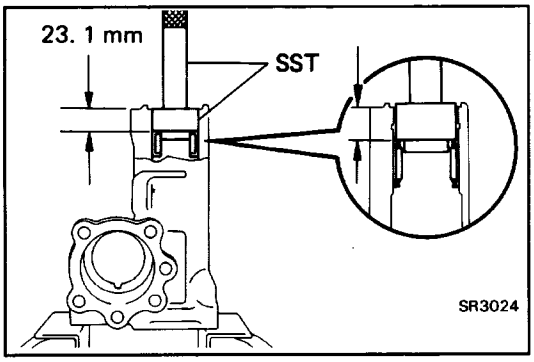

(f) Using SST, press in a new lower bearing.
SST 09630–00012 (09631–00020, 09631–00090)
HINT: Install the lower bearing so that it is positioned 23.1 mm (0.909 in.) away from the housing inner end surface.

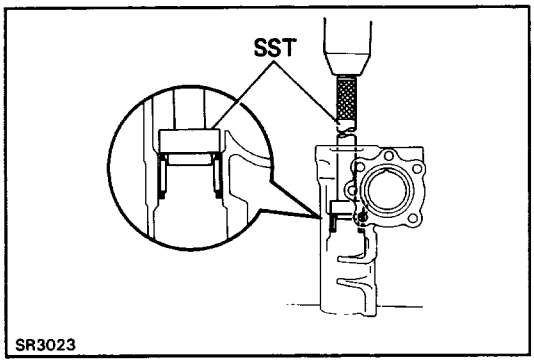

(g) Using SST, press in a new upper bearing.
SST 09630–00012 (09631–00020, 09631–00090)

HINT: The bearing's top end should be installed so that it aligns with the housing end surface.

(h) Install a new O–ring and metal spacer.

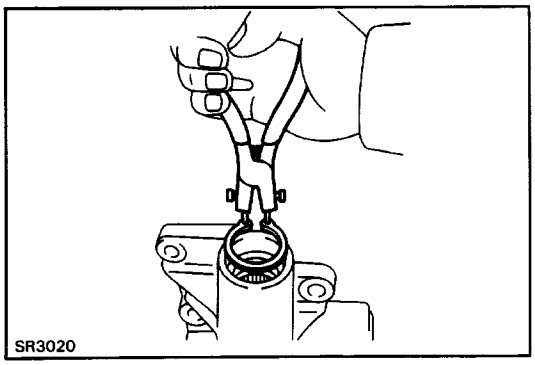

(i) Using snap ring pliers, install the snap ring.

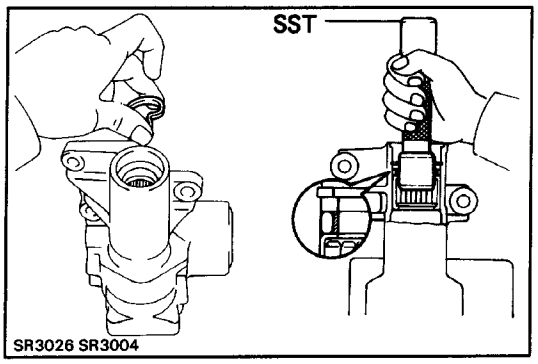

(j) Form a new teflon ring into a heart shape and install it with hand.

(k) Using SST, form the teflon ring.

NOTICE: The teflon ring must be squeezed before inserting the cross shaft or damage will result.

SST 09630–00012 (09631–00120)

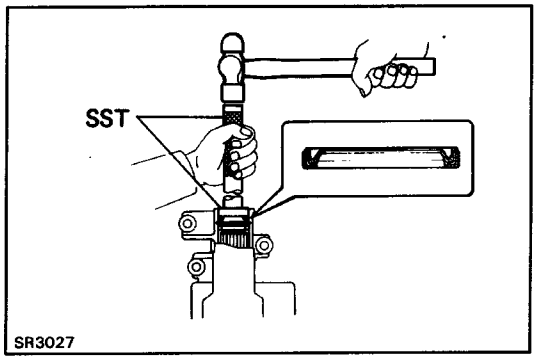

(l) Using SST, drive a new oil seal into the gear housing.

SST 09630–00012 (09631–00020, 09631–00090)

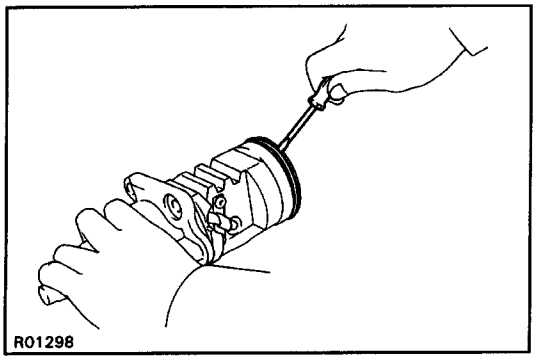

5. IF NECESSARY, REPLACE CONTROL VALVE TEFLON RING AND O–RING

(a) Using a screwdriver, remove the teflon ring and 0–ring.

NOTICE: Be careful not to damage the control valve.

(b) Install a new O–ring.

(c) Expand a new teflon ring with your fingers.

NOTICE: Be careful not to over–expand the teflon ring.

(d) Install the teflon ring.

(e) Coat the teflon ring with power steering fluid and snug it down with piston ring compressor for 5 – 7 minutes.

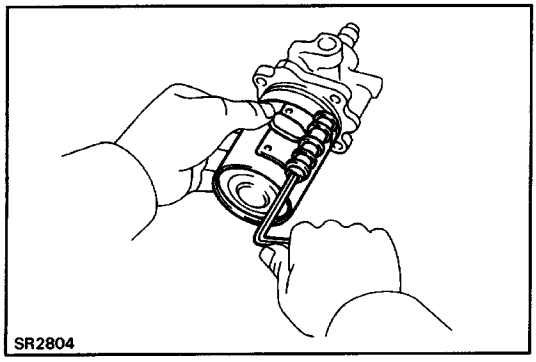

6. IF NECESSARY, REPLACE UNION SEAT

(a) Using a screw extractor, remove the union seat.

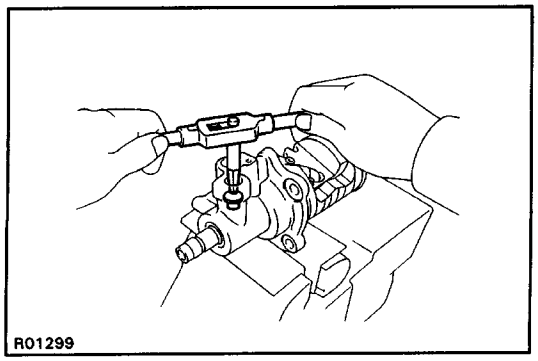

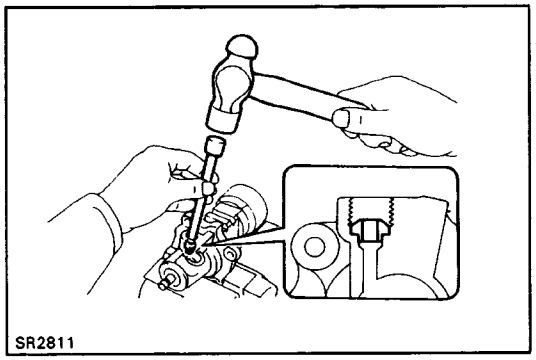

(b) Using a plastic hammer and extension bar, tap in a new union seat.

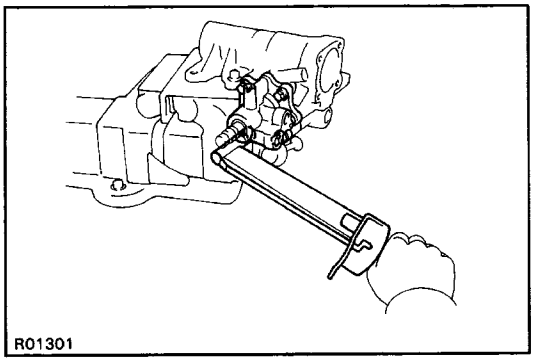

ASSEMBLY OF GEAR HOUSING
(See page SR–76)
1. INSTALL WORM GEAR VALVE BODY ASSEMBLY
(a) Install the three 0–rings to the gear housing and valve body.
(b) Mount the gear housing on SST and clamp SST in vise.
SST 09630–00012 (09631–00140)

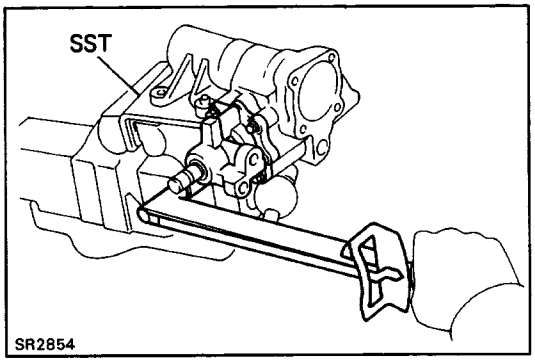

(c) Install and torque the four bolts.
Torque: 61 N–m (620 kgf–cm, 45 ft–lbf)
NOTICE: Be careful not to damage the teflon ring.

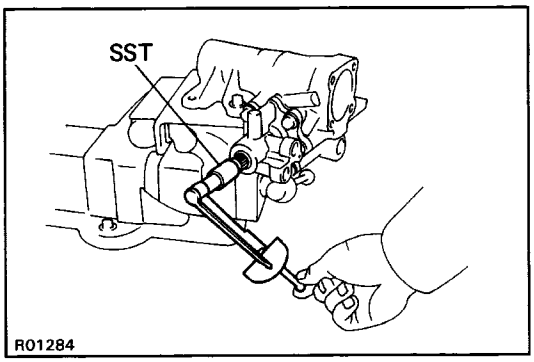

(d) Using SST, check the worm gear preload.
SST 09616–00010
Preload (Starting): 0.3 – 0.5 N–m
(3 – 5.5 kgf –cm, 2.6 – 4.8 in. AM)
HINT: Hold the power piston nut to prevent it from turning.
If preload is not correct, replace the worm gear assembly.

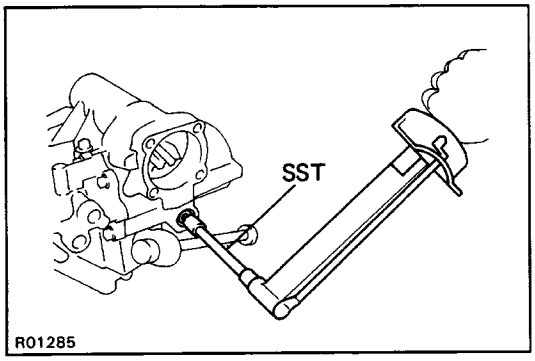

2. INSTALL PLUNGER GUIDE NUT
(a) Install the plunger, plunger guide and spring.
(b) Install a new O–ring to the plunger guide nut and install the plunger guide nut with SST.
SST 09043–38100
Torque: 20 N–m (205 kgf–cm, 15 ft–lbf)

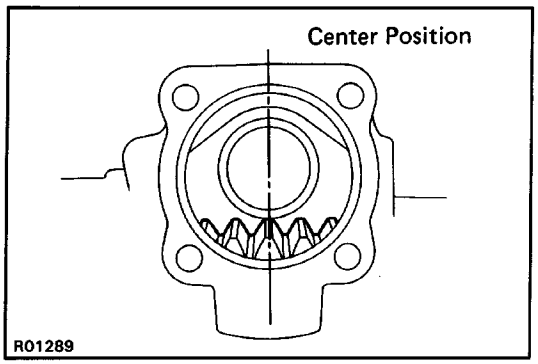

3. INSTALL CROSS SHAFT AND END COVER

(a) Install a new 0–ring on the end cover.

(b) Assemble the cross shaft to the end cover.
HINT: Fully loosen the adjusting screw.

(c) Set the worm gear at the center of the gear housing.

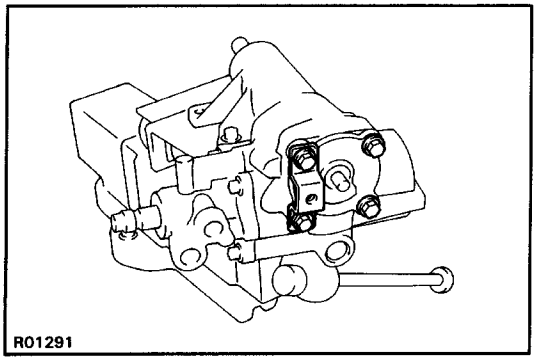

(d) Install and push the cross shaft into the gear hous–ing so that the center teeth mesh together.

(e) Install the four cap bolts. Torque the bolts in a diag–onal pattern.
Torque: 61 N–m (620 kgf–cm, 45 ft–lbf)

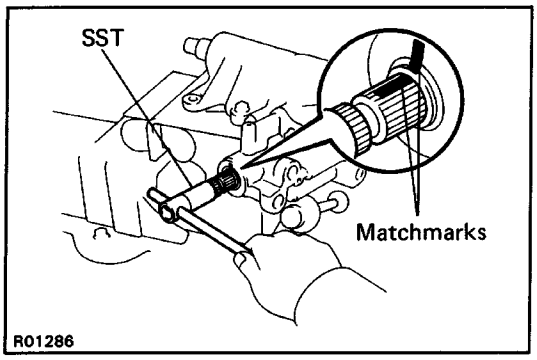

4. DETERMINE CENTER POSITION OF GEAR HOUSING

(a) Using SST, turn the worm shaft so full lock in both directions and determine the exact center.
SST 09616–00010

(b) Place matchmarks on the worm shaft and housing to show neutral position.

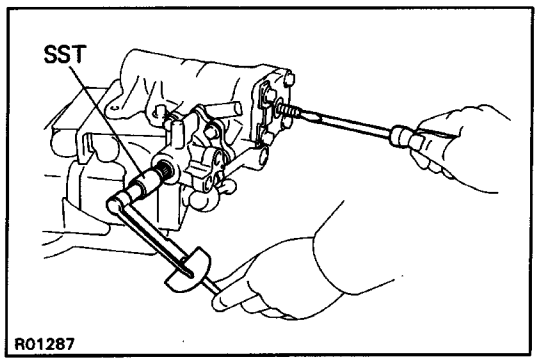

5. ADJUST CROSS SHAFT ADJUSTING SCREW

(a) Install SST with a torque meter on the worm shaft.
SST 09616–00010

(b) Turn the adjusting screw while measuring the pre–load until it should be increased 0.2 – 0.4 N–m (2 – 4 kgf–cm, 1.7 – 3.5 in.–lbf) more than the preload listed in step 1.

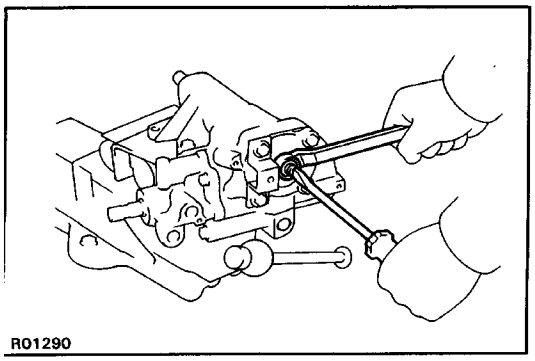

6. INSTALL NEW WASHER

7. INSTALL AND TIGHTEN LOCK NUT

Torque the lock nut while holding the adjusting screw.
Torque: 46 N–m (470 kgf–cm, 34 ft–lbf)

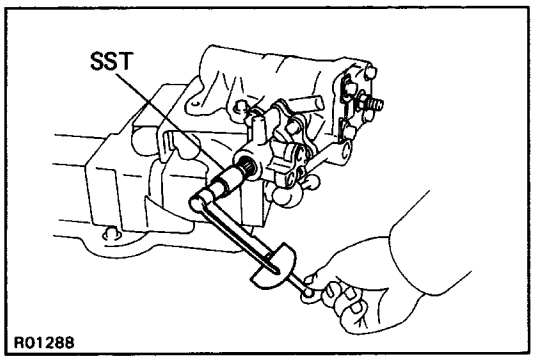

8. CHECK TOTAL PRELOAD

Using SST with a torque meter, check total preload.

SST 09616–00010

Total preload (Starting):

0.5 – 0.9 N–m (5 – 9.5 kgf–cm, 4.3 – 8.3 in.–lbf)

Progressive Power Steering (PPS)

DESCRIPTION AND ELECTRONIC CIRCUIT

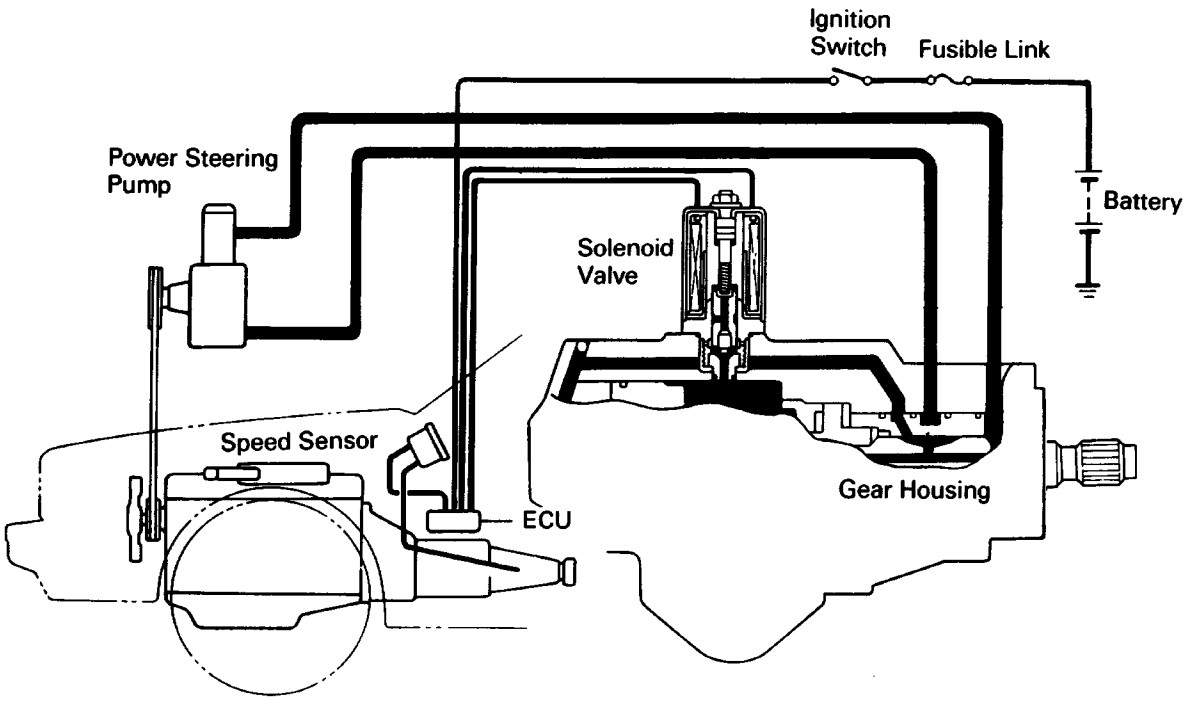

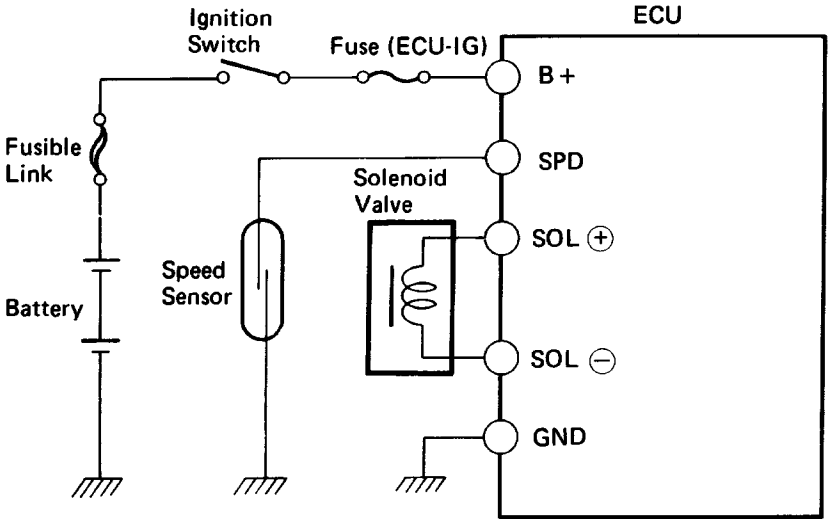

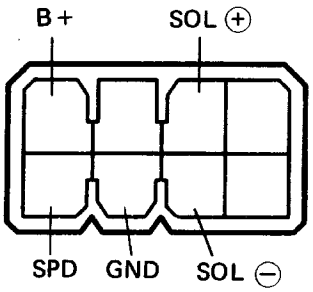

SR2473
B8578
G-7-2

TROUBLESHOOTING

Trouble

- Hard steering at idle or low–speed driving.
- Steering too sensitive during high–speed driving.

Preliminary Check

- Check tire pressure.
- Check lubrication of suspension and steering linkage.
- Check front wheel alignment.
- Check steering system joint and suspension arm ball joint.
- Check for bent steering column.
- Check that all connectors are secure.
- Check PS pump fluid pressure. (See page SR–41)

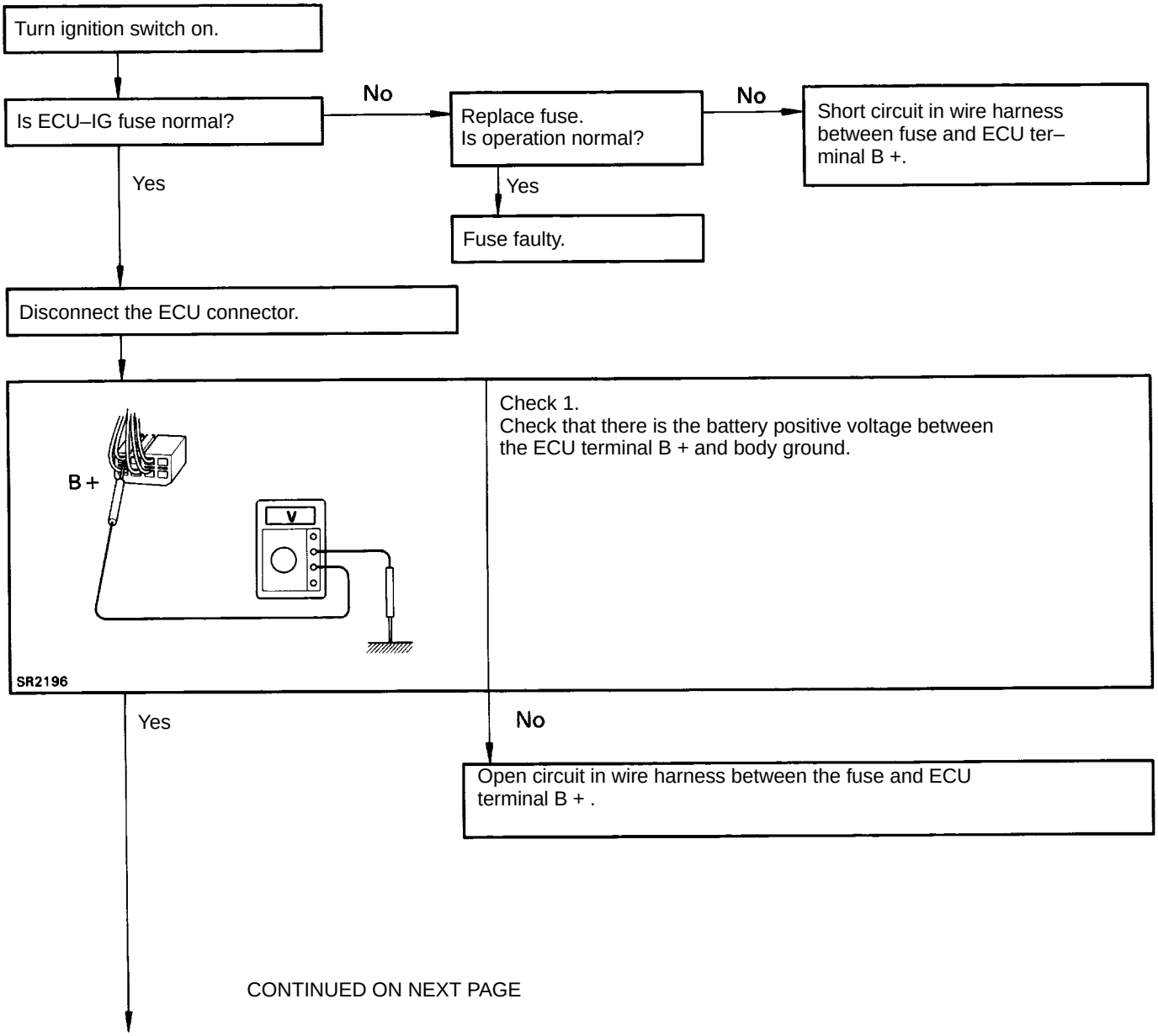

CONTINUED ON NEXT PAGE

Yes

CONTINUED FROM PREVIOUS PAGE

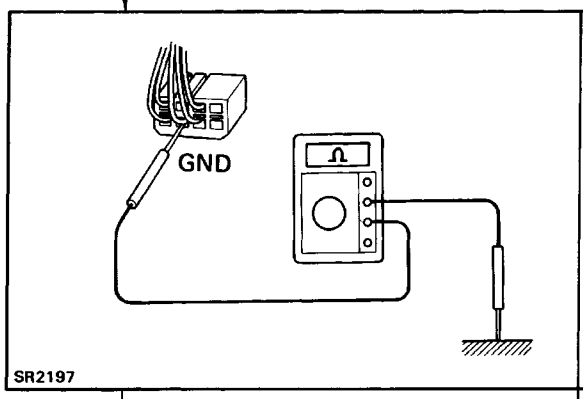

Check 2.
Check that there is continuity between the ECU terminal G ND and body ground.

Yes

No

- Open circuit in wire harness between the ECU terminal GND and body ground.
- Body ground faulty.

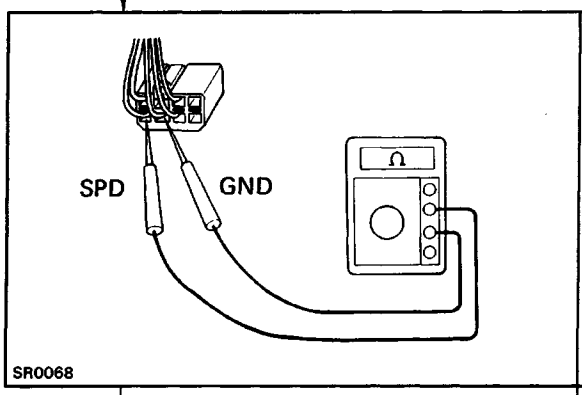

Check 3.
(a) Jack up the rear wheel on one side.
(b) Connect an ohmmeter between the ECU connector terminals SPD and GND.
(c) Spin the rear wheel and check that the meter needle deflects from 0 Ω to ∞Ω.

Yes

No

- Open or short circuit in wire harness between the ECU terminal SPD and speed sensor.
- Speed sensor faulty (See page BE–34).

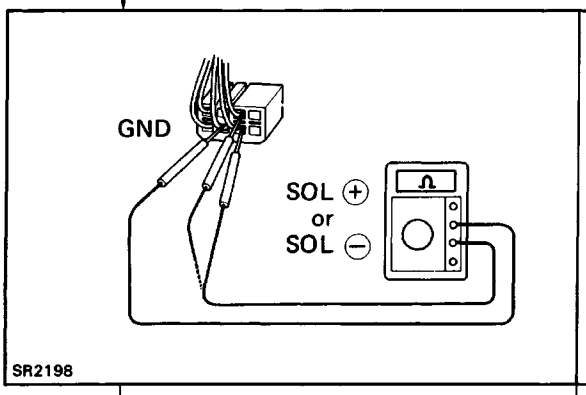

Check 4.
Check that there is no continuity between terminals SOL + or SOL – and GND.

Yes

No

- Short circuit in wire harness between the terminals SOL + and SOL – .
- Solenoid valve faulty.

CONTINUED ON NEXT PAGE

Yes

CONTINUED FROM PREVIOUS PAGE

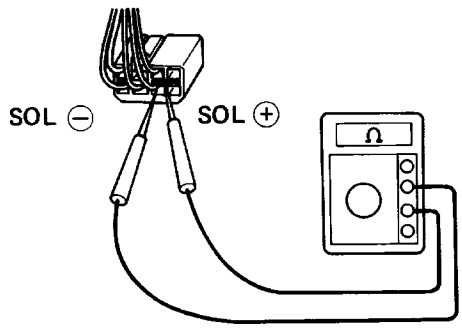

Check 5.
Measure the resistance between terminals SOL **+** and SOL **–**.
Standard resistance: 6 – 11 Ω

Yes

No

- Open circuit in wire harness between the terminals SOL **+** and SOL **–**.
- Solenoid valve faulty.

Check 6.
Inspect ECU.

Bad

Replace ECU .

Check 7.
(a) Turn the steering wheel full lock position.
(b) Apply battery positive voltage between terminals SOL **+** and SOL **–** and turn the solenoid ON and OFF. Is there a change in gear housing fluid pres

ELECTRONIC CONTROL SYSTEM

Solenoid Valve

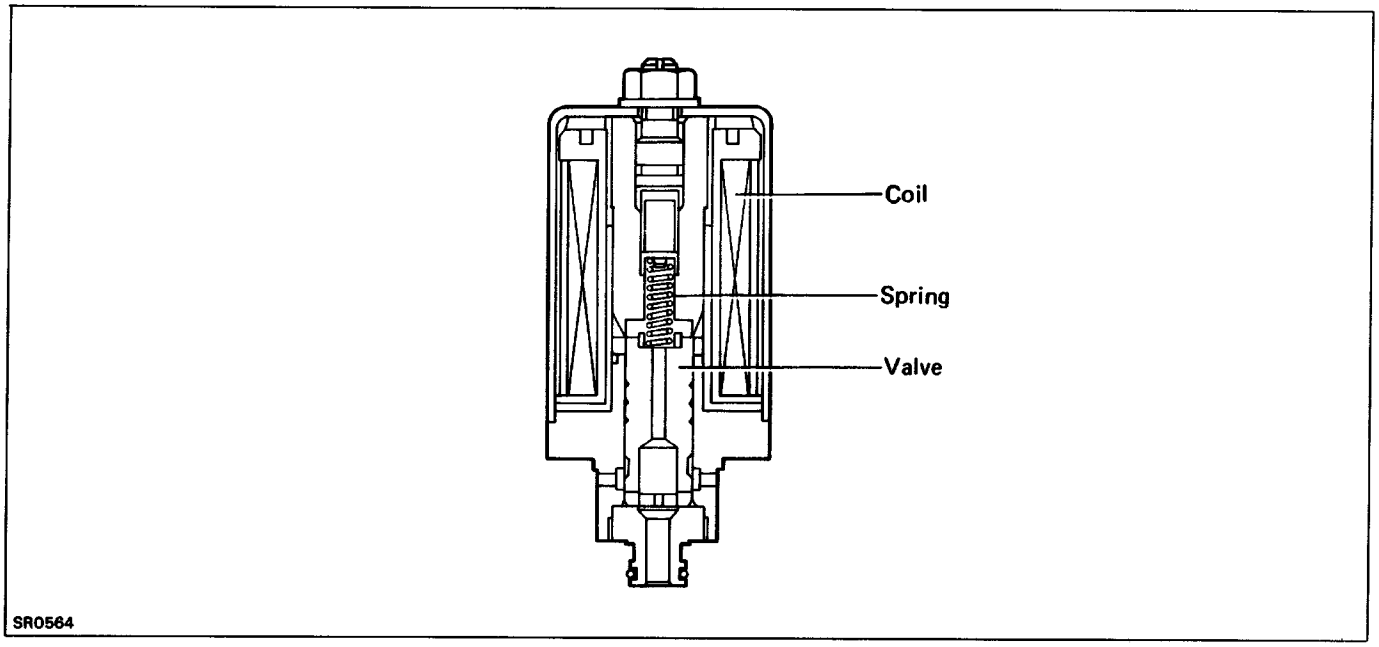

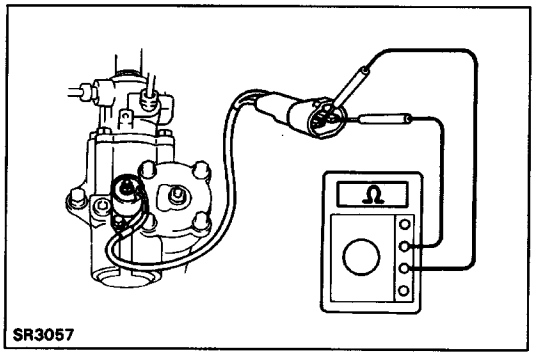

ON–VEHICLE INSPECTION

1. DISCONNECT WIRING CONNECTOR

2. MEASURE RESISTANCE

Measure the resistance between SOL **–** and SOL **+**.

Resistance: 6 – 11Ω

3. CONNECT WIRING CONNECTOR

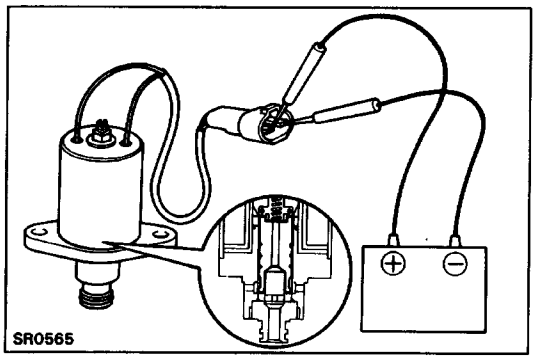

CHECK SOLENOID OPERATION

1. REMOVE SOLENOID VALVE FROM GEAR HOUSING

2. CHECK SOLENOID OPERATION

(a) Connect the battery positive terminal to the solenoid terminal SOL **+**.

(b) Connect the battery negative terminal to the sole–noid terminal SOL **–**.

Confirm that the needle valve has withdrawn about 2 mm (0.79 in.).

If not, replace the solenoid valve.

3. INSTALL SOLENOID VALVE TO GEAR HOUSING

4. BLEEDING OF POWER STEERING LINE

Power Steering ECU

INSPECTION OF ECU

1. JACK UP VEHICLE AND SUPPORT IT ON STANDS

2. REMOVE CENTER CONSOLE

HINT: Do not disconnect the ECU connector.

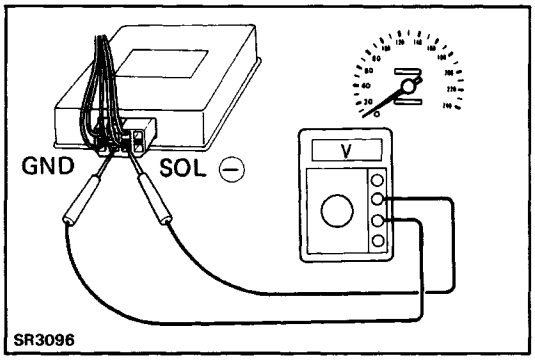

3. START ENGINE

4. MEASURE VOLTAGE OF ECU

(a) Using a voltmeter, measure the voltage between ECU terminals GND and SOL E) while the engine is idling.

Standard voltage: 0 – 0.05 V

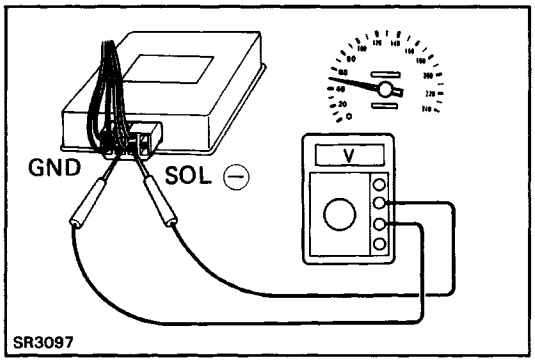

(b) Place the transmission in gear and while running at about 50 km/h (31 mph), measure the voltage be– tween the ECU terminals GND and SOL E).

Standard voltage: Voltage measured in (a) above, plus 0.12 – 0.24 V

If no voltage, try another ECU.

5. INSTALL CENTER CONSOLE

6. LOWER VEHICLE

STEERING LINKAGE (2WD)

REMOVAL AND INSTALLATION OF STEERING LINKAGE

Remove and install the parts as shown.

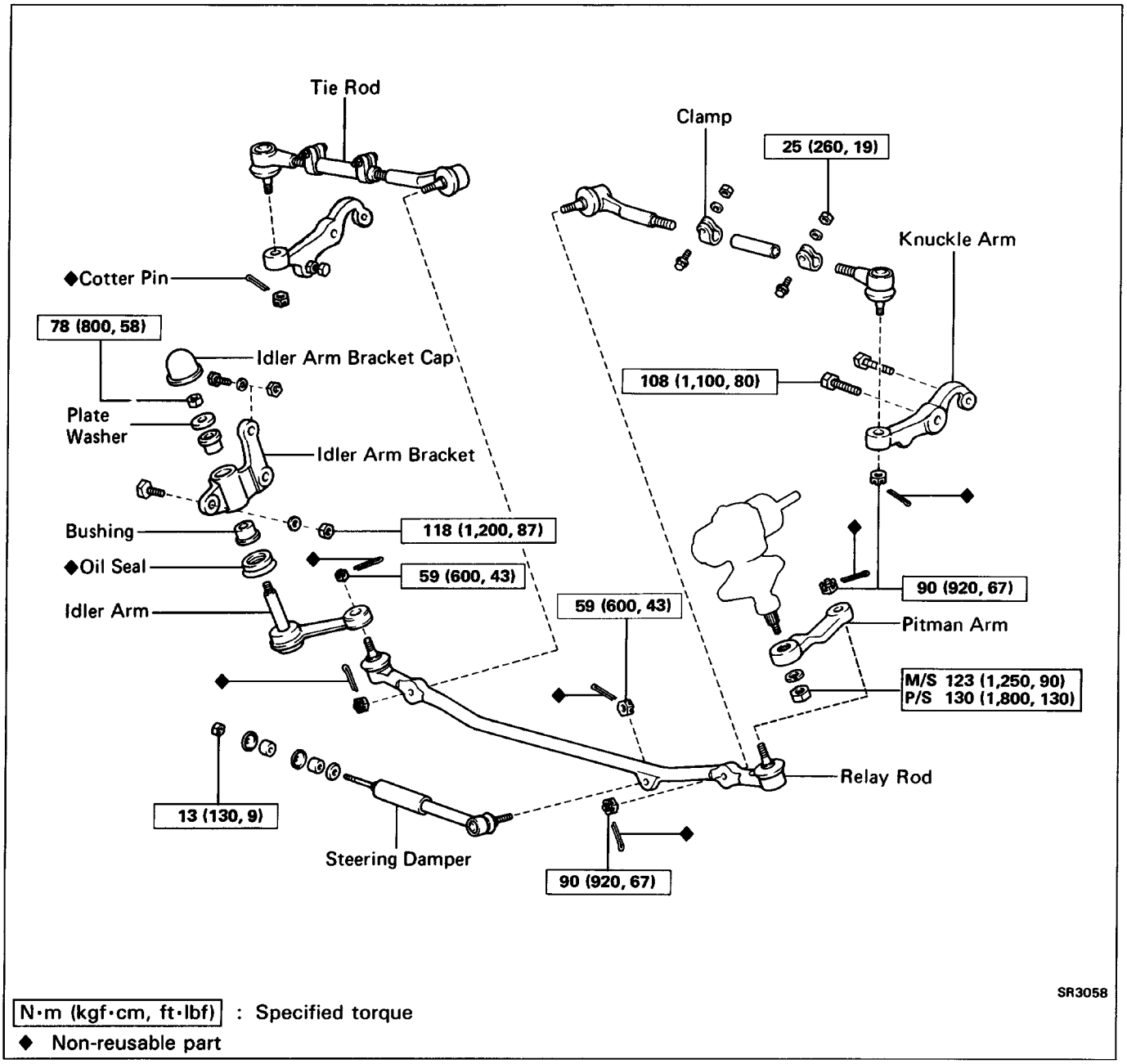

HINT:

- When connecting the ball stud to the arm or rod, remove the grease on the joint surfaces.
- After torquing the ball stud nut to specified torque, advance the nut just enough to insert the cotter pin.
- After installing any of the steering linkage components, check the front wheel alignment.
  (See page SA–3, 6)

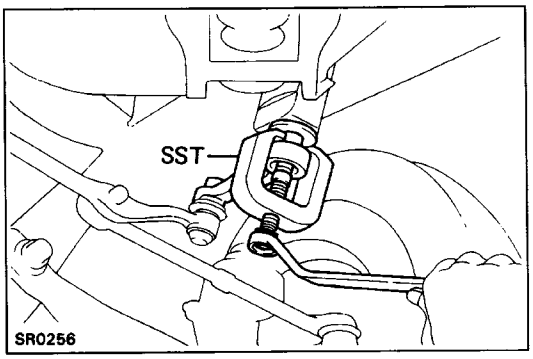

(MAIN POINTS OF REMOVAL AND INSTALLATION)

1. DISCONNECT AND CONNECT PITMAN ARM FROM/TO SECTOR SHAFT

(a) Loosen the pitman arm nut.

(b) Using SST, disconnect the pitman arm from the sec–tor shaft.
SST 09610–55012

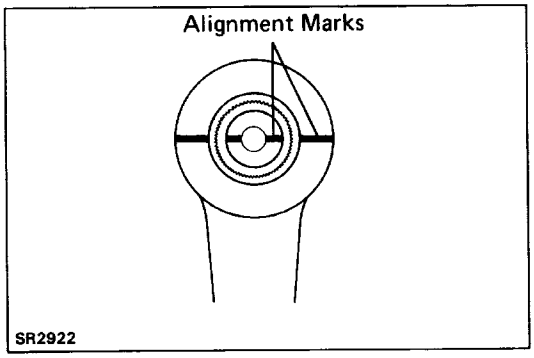

(c) When connecting, align alignment marks on the pit–man arm and the sector shaft, and install the spring washer and nut.

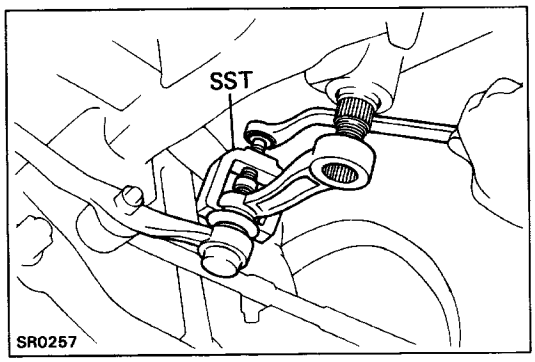

2. DISCONNECT PITMAN ARM FROM RELAY ROD

Using SST, disconnect the pitman arm from the relay rod.
SST 09611–22012

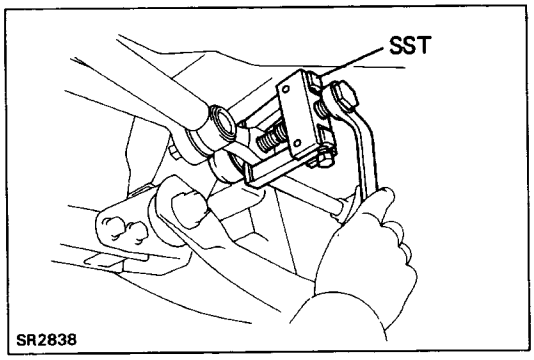

3. DISCONNECT TIE ROD FROM RELAY ROD

Using SST, disconnect the tie rod from the relay rod.
SST 09628–62011

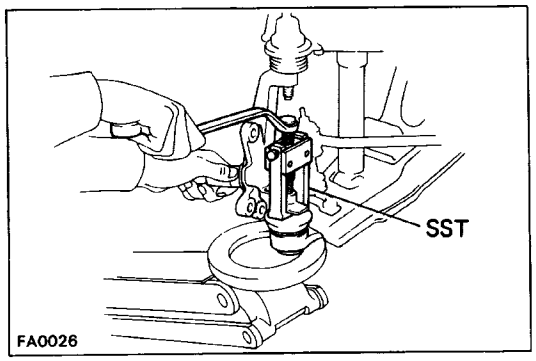

4. DISCONNECT TIE ROD FROM KNUCKLE ARM

(a) Remove the front axle hub. (See page SA–11

(b) Using SST, disconnect the tie rod from the knuckle arm.
SST 09628–62011

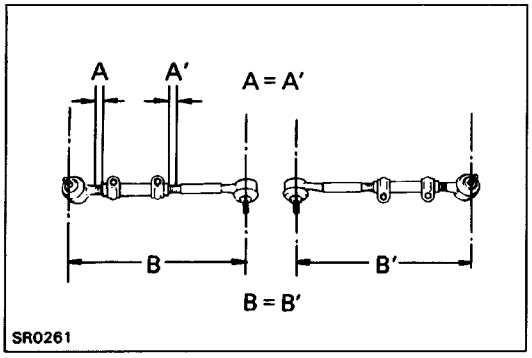

5. CONNECT TIE ROD

(a) Screw the tie rod ends into the tie rod.

HINT: The tie rod length should be approximately 314.5 mm (12.382 in.), and the remaining length of threads on both tie rod ends should be equal.

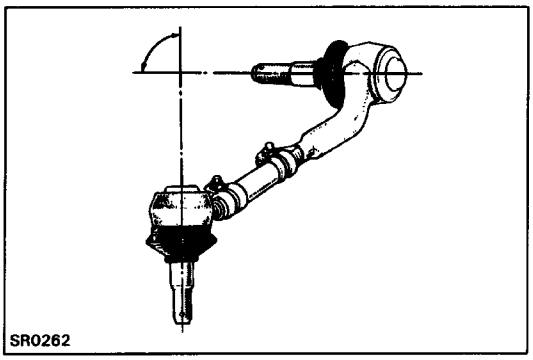

(b) Turn the tie rods so that they cross at about 90 de–grees. And connect it.

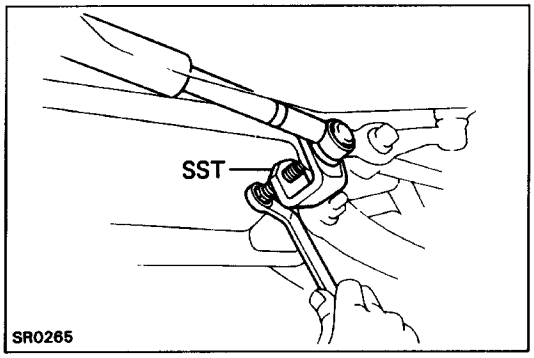

6. DISCONNECT STEERING DAMPER FROM RELAY ROD

Using SST, disconnect the steering damper from the re–lay rod.
SST 09611–12010

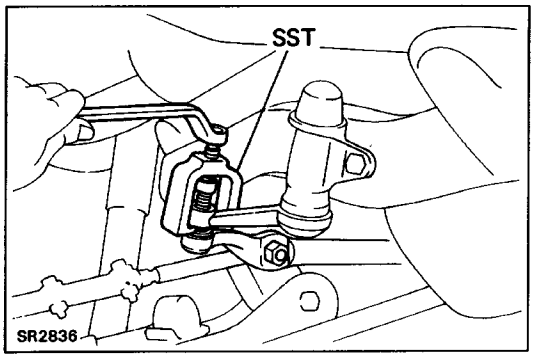

7. DISCONNECT IDLER ARM FROM RELAY ROD

Using SST, disconnect the idler arm from the relay rod.
SST 09611–22012

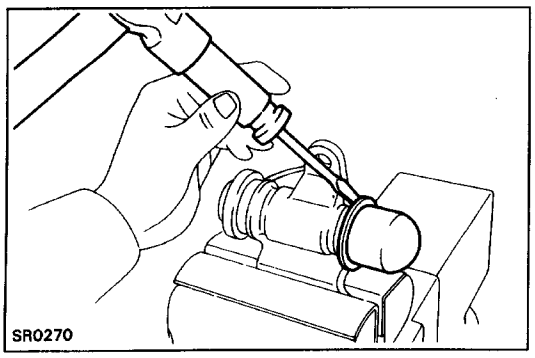

DISASSEMBLY OF IDLER ARM BRACKET

1. REMOVE IDLER ARM BRACKET CAP

Using a screwdriver and hammer, remove the idler arm bracket cap.

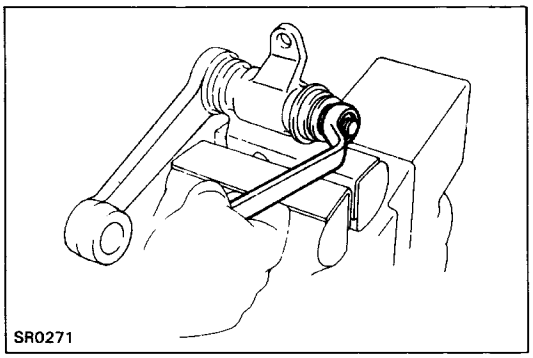

2. REMOVE IDLER ARM WITH SHAFT

Remove the nut and pull the idler arm with the shaft off the idler arm bracket.

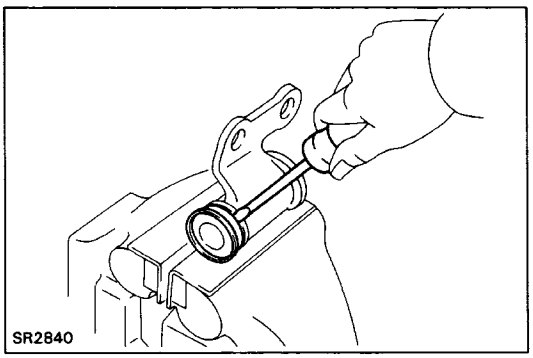

3. REMOVE OIL SEAL

Using a screwdriver, remove the oil seal.

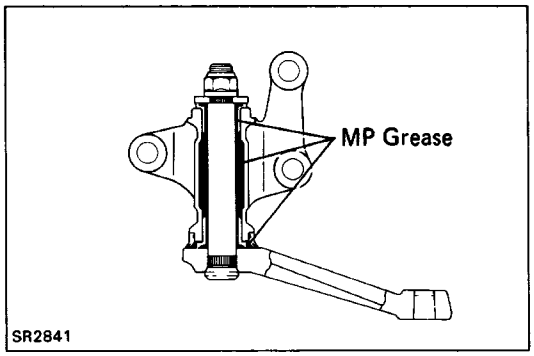

ASSEMBLY OF IDLER ARM BRACKET

1. INSTALL NEW OIL SEAL

2. APPLY NIP GREASE

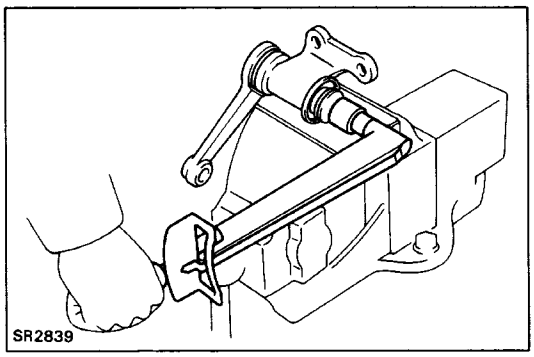

3. INSTALL IDLER ARM BRACKET

(a) Insert the idler arm shaft to the bracket.

(b) Install the washer and nut.

Torque: 78 N–m (800 kgf–cm, 58 ft–lbf)

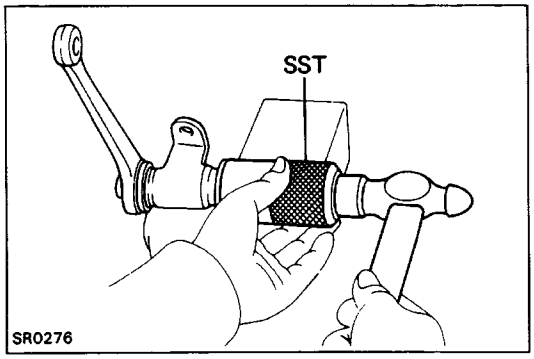

4. INSTALL IDLER ARM BRACKET CAP

(a) Apply sealant to the cap end.

Sealant: Part No. 08826–00090, THREE BOND 1281 or equivalent

(b) Using SST, install the idler arm bracket cap.

SST 09636–20010

STEERING LINKAGE (4WD)

REMOVAL AND INSTALLATION OF STEERING LINKAGE

Remove and install the parts as shown.

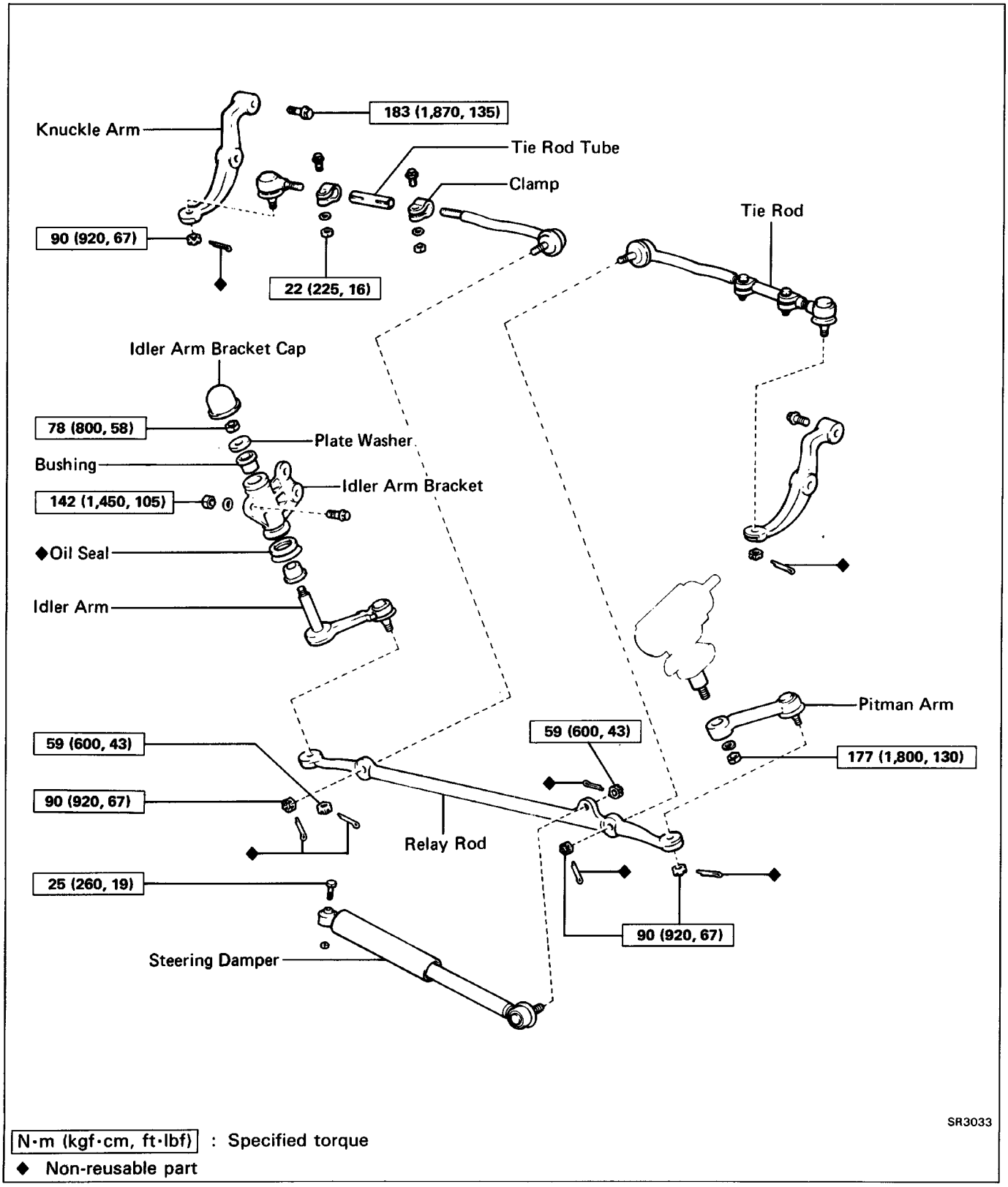

HINT: (See page SR–93)

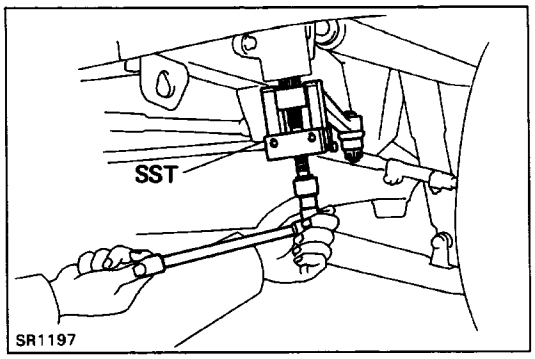

(MAIN POINTS OF REMOVAL AND INSTALLATION)

1. DISCONNECT AND CONNECT PITMAN ARM FROM/TO SECTOR SHAFT

(a) Loosen the pitman arm nut.

(b) Using SST, disconnect the pitman arm from the sec–tor shaft.
SST 09628–62011

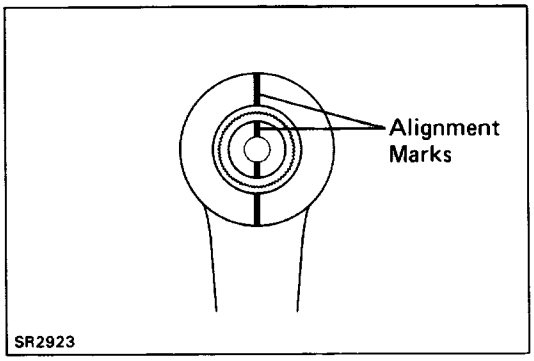

(c) When connecting, align alignment marks on the pit–man arm and the sector shaft, and install the spring washer and nut.

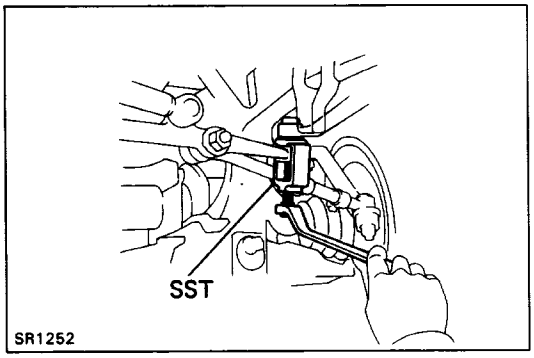

2. DISCONNECT PITMAN ARM FROM RELAY ROD

Using SST, disconnect the pitman arm from the relay rod.
SST 09611–22012

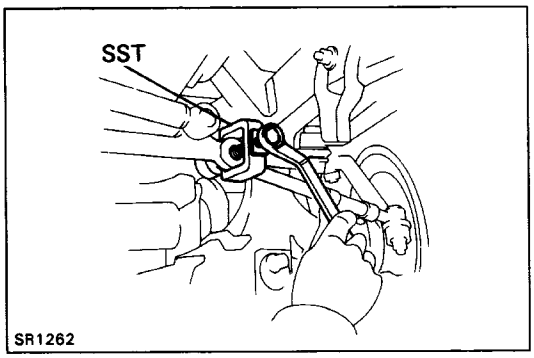

3. DISCONNECT TIE ROD FROM RELAY ROD

Using SST, disconnect the tie rod from the relay rod.
SST 09611–22012

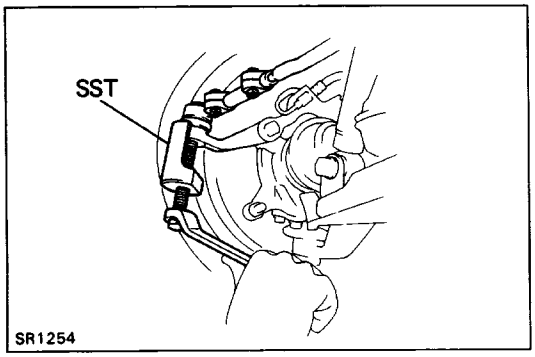

4. DISCONNECT TIE ROD FROM KNUCKLE ARM

Using SST, disconnect the tie rod from the knuckle arm.
SST 09628–62011

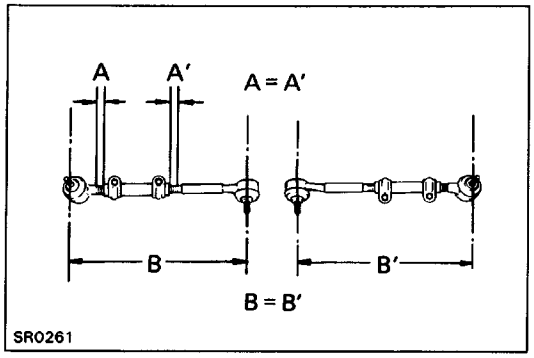

5. CONNECT TIE ROD

(a) Screw the tie rod ends into the tie rod.

HINT: The tie rod length should be approximately 328.5 mm (12.933 in.), and the remaining length of threads on both tie rod ends should be equal.

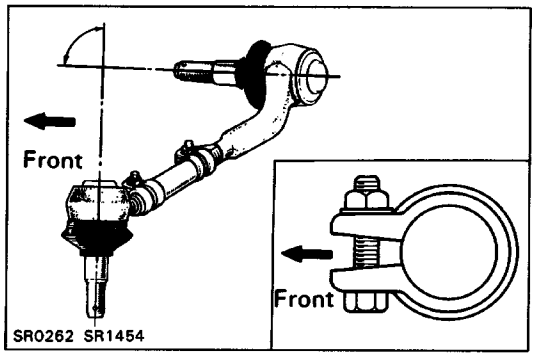

(b) Turn the tie rods so that they cross at about 90 de–grees. And connect it.

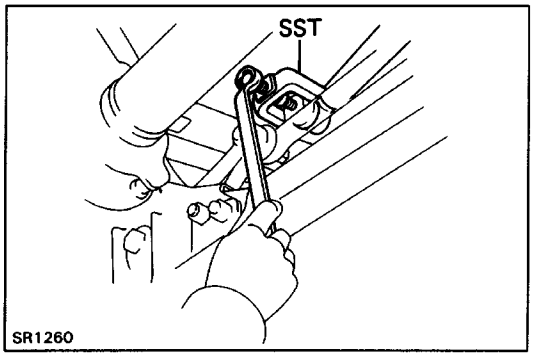

6. DISCONNECT STEERING DAMPER FROM RELAY ROD

Using SST, disconnect the steering damper from the re–lay rod.

SST 09611–22012

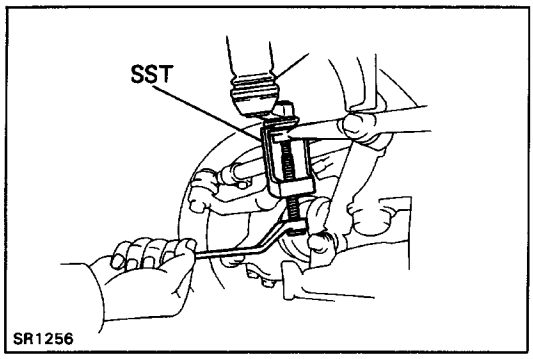

7. DISCONNECT IDLER ARM FROM RELAY ROD

Using SST, disconnect the idler arm from the relay rod.

SST 09610–20012

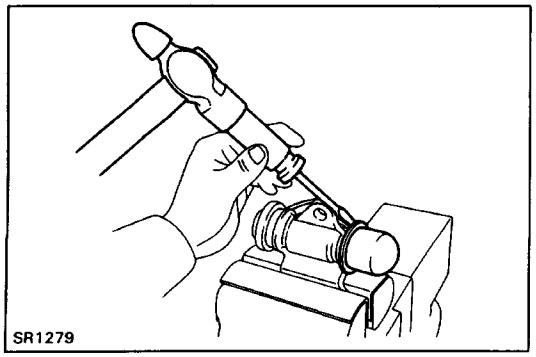

DISASSEMBLY OF IDLER ARM BRACKET

1. REMOVE IDLER ARM BRACKET CAP

Using a screwdriver and hammer, remove the idler arm bracket cap.

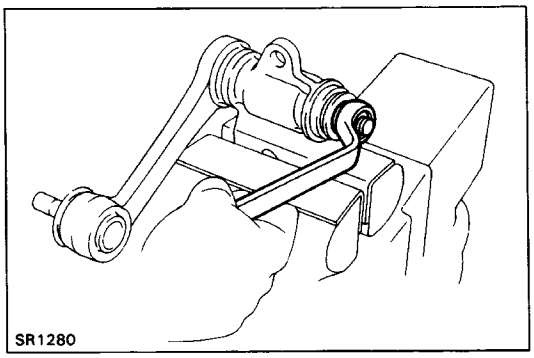

2. REMOVE IDLER ARM WITH SHAFT

Remove the nut and pull the idler arm with the shaft off the idler arm bracket.

3. REMOVE OIL SEAL

Using a screwdriver, remove the oil seal.

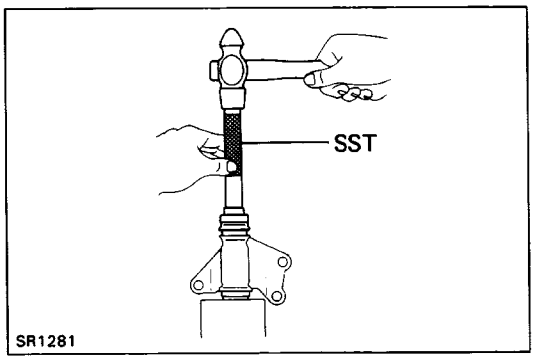

ASSEMBLY OF IDLER ARM BRACKET

1. INSTALL OIL SEAL

Using SST, tap in a new oil seal.

SST 09620–30010 (09624–30010, 09631–00020)

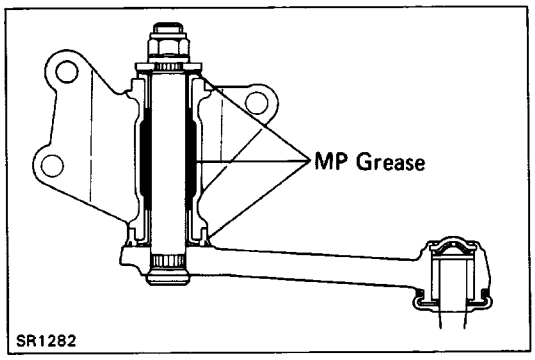

2. APPLY MP GREASE

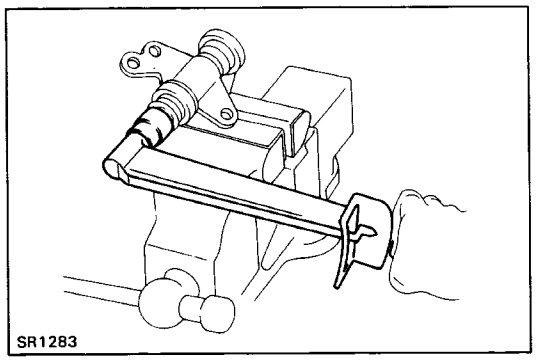

3. INSTALL IDLER ARM WITH SHAFT

(a) Install the idler arm shaft to the bracket.

(b) Install the washer and nut.

Torque: 78 N–m (800 kgf–cm, 58 ft–lbf)

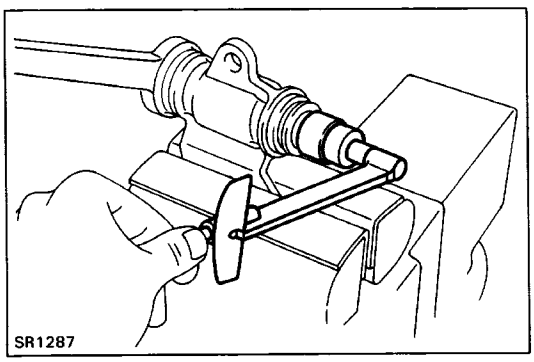

4. INSPECT IDLER ARM FOR ROTATION CONDITION

Using a torque meter, turn the nut several times and take the torque reading.

Torque (Turning): 0.5 – 2.9 N¿ m

(5 – 30 kgf–cm, 5 – 26 in.¿lbf)

If necessary, replace the bushings.

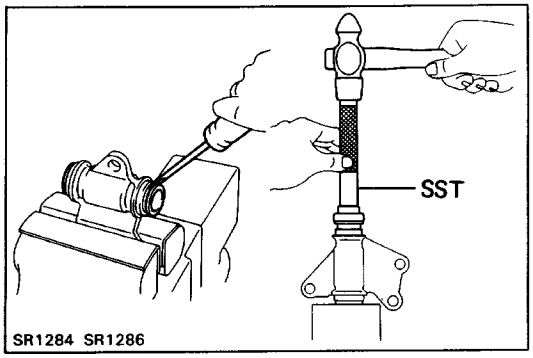

5. IF NECESSARY, REPLACE BUSHINGS

(a) Using a screwdriver, remove the bushings.

(b) Using SST, install each bushing to the idler arm bracket.
SST 09620–30010 (09627–30010, 09631–00020)

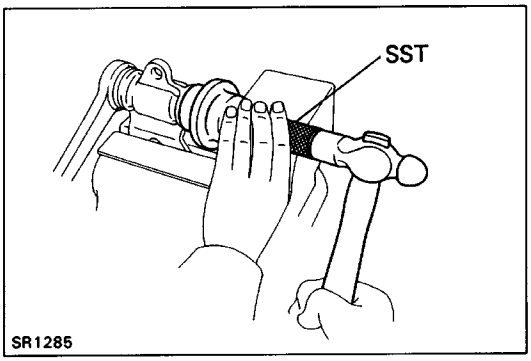

6. INSTALL IDLER ARM BRACKET CAP

(a) Apply sealant to the cap end.
Sealant: Part No. 08826–00090, THREE BOND 1281 or equivalent

(b) Using SST, install the idler arm bracket cap.
SST 09223–46011